01/2019

# Mod: CGE11-P (230/1)

**Production code: NB-UA-104E/21 DI**

Diamond
catering equipment

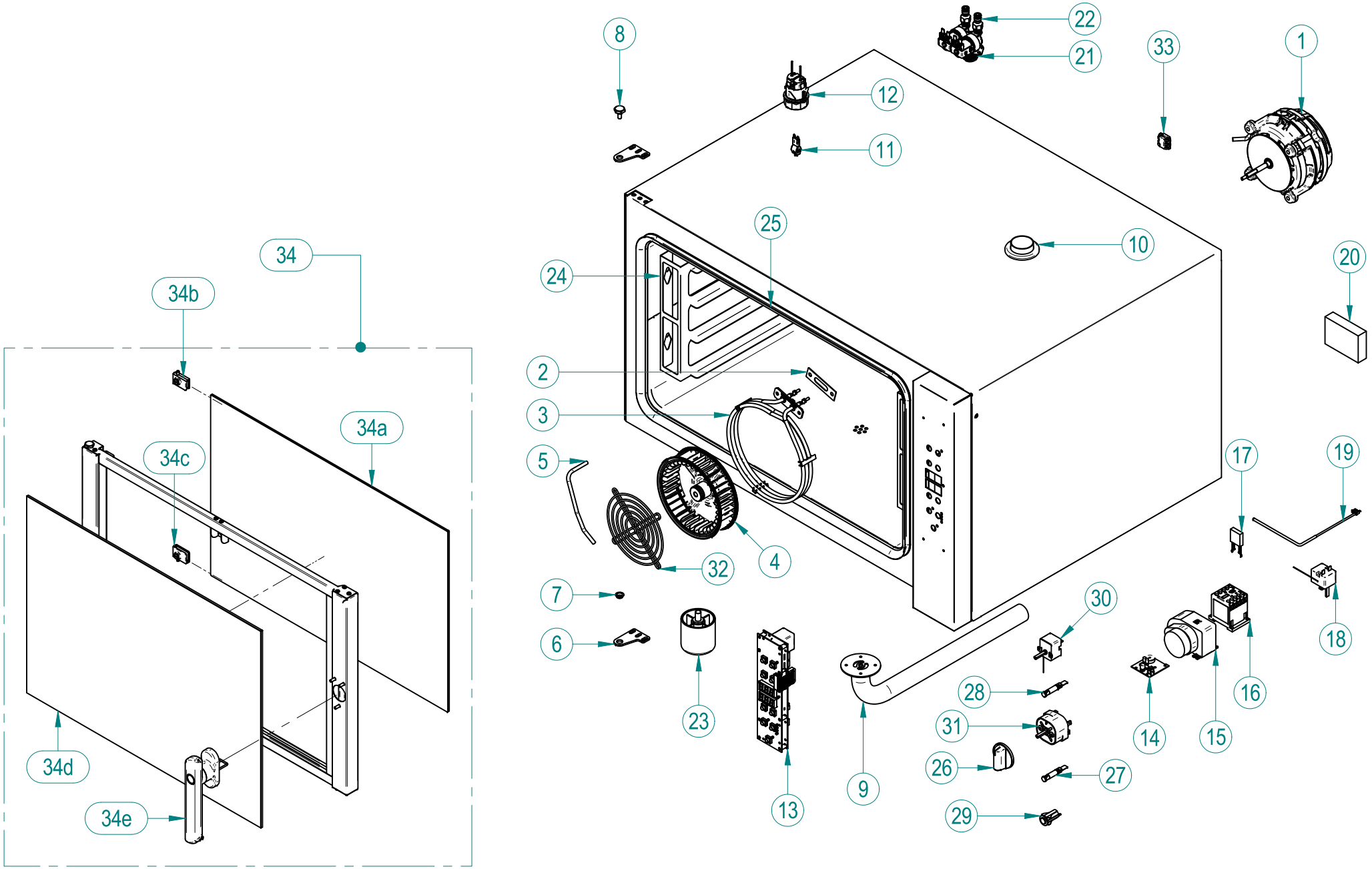


QUESTO DISEGNO E' DI NOSTRA PROPRIETA' E NON PUO' ESSERE USATO O RIPRODOTTO SENZA LA NOSTRA AUTORIZZAZIONE / THIS DRAWING BELONG SOLELY TO OUR COMPANY AND CANNOT BE USED OR RIPRODUCED WITHOUT OUR LICENCE.

| Data: 30/01/2019 | Nice & Go<br>Side door CrossWise | | | | Cod. esploso<br>B04.0014.00 | NB-UA-104E | NB-UA-104E/21 | NB-UA-604E | NB-UA-604E/21 | NB-UA-004E | NB-UP-104E | NB-UP-604E | NB-UP-004E |
|---|---|---|---|---|---|---|---|---|---|---|---|---|---|
| **Pos.** | **Descrizione** | **Description EN** | **Description FR** | **Description DE** | **Codice** | **Q.tà** | | | | | | | |
| 1 | Motore | motor | moteur | Motor | DP0020-00 | 2 | 2 | 2 | 2 | 2 | 2 | 2 | 2 |
| 2 | Guarnizione resistenza | heating element gasket | joint résistance | Heizungdichtung | PTPS-006 | 2 | 2 | 2 | 2 | 2 | 2 | 2 | 2 |
| 3 | Resistenza | heating element | résistance | Heizungelement | LC-021 | 2 | - | 2 | - | 2 | 2 | 2 | 2 |
| | | | | | LC-024 | - | 2 | - | 2 | - | - | - | - |
| 4 | Ventola | fan | ventilateur | Lüfter | DP0010-00 | 2 | 2 | 2 | 2 | 2 | 2 | 2 | 2 |
| 5 | Tubo acqua camera | cooking chamber water injection pipe | tube injection chambre de cuisson | Wassereinspritzrohr | HC-112 | 2 | 2 | 2 | 2 | 2 | 2 | 2 | 2 |
| 6 | Cerniera | hinge | charnière | Scharnier | NGO0010-00 | 2 | 2 | 2 | 2 | 2 | 2 | 2 | 2 |
| 7 | Boccola cerniera | hinge bushing | bague charnière | Scharnierhhülse | IM-050 | 1 | 1 | 1 | 1 | 1 | 1 | 1 | 1 |
| 8 | Perno cerniera | hinge pin | axe de charnière | Stift für Türscharnier | HM-550 | 1 | 1 | 1 | 1 | 1 | 1 | 1 | 1 |
| 9 | Tubo scarico | discharge pipe | tuyau de décharge | Ablaufrohr | NGO0002-00 | 1 | 1 | - | - | 1 | 1 | 1 | 1 |
| 10 | Guarnizione sfiato | release valve gasket | joint houra | Dichtung Ablassventil | IM-042 | 1 | 1 | 1 | 1 | 1 | 1 | 1 | 1 |
| 11 | Lampada | lamp | lampe | Birne | LC-051 | 1 | 1 | 1 | 1 | 1 | 1 | 1 | 1 |
| 12 | Portalampada | bulb socket | support de lampe | Lampenfassung | LC-053 | 1 | 1 | 1 | 1 | 1 | 1 | 1 | 1 |
| 13 | Tastiera elettronica | electronic keyboard | clavier eléctronique | Platine | MC-922 | - | - | - | - | - | 1 | 1 | 1 |
| 14 | Buzzer | buzzer | sonnerie | Summer | C5366-00 | 1 | 1 | 1 | 1 | 1 | - | - | - |
| 15 | Timer | timer | minuterie | Timer | LC-039 | 1 | 1 | 1 | 1 | 1 | - | - | - |
| 16 | Contattore | contactor | contacteur | Kontaktor | LC-310 | 2 | 2 | 2 | 2 | 2 | 2 | 2 | 2 |
| 17 | Filtro antidisturbi per contattori | contactor RFI | filtre anti-interférence contacteur | Storschutzfilter | LC-312 | - | - | - | - | - | 2 | 2 | 2 |
| 18 | Term Sicurezza | safety thermostat | thermostat de sécurité | Sicherheit Thermostat | LC-376 | 1 | 1 | 1 | 1 | 1 | 1 | 1 | 1 |
| 19 | Sondino PT1000 | PT1000 temperature probe | sonde de température PT1000 | Sonde PT1000 | MC-924 | 1 | 1 | 1 | 1 | 1 | - | - | - |
| 20 | Morsettiera | terminal board | terminal | Klemmleiste | FX0141-00 | 1 | 1 | 1 | 1 | 1 | 1 | 1 | 1 |
| 21 | Elettrovalvola | solenoid valve | eléctrovanne | Elektroventil | LC-540 | 1 | 1 | 1 | 1 | 1 | 1 | 1 | 1 |
| 22 | Raccordo tubo x elettrov. | solenoid valve fitting | raccord tuyau électrovanne | Rohrverschrabung Elektroventil | HR-660 | 2 | 2 | 2 | 2 | 2 | 2 | 2 | 2 |
| 23 | Piedino | foot | pied du four | Fuß | HC-903 | 4 | 4 | 4 | 4 | 4 | 4 | 4 | 4 |
| 24 | Portateglie dx | tray-slides right | glissières droit | Einschubschienen rechts | NGO0045-00 | 1 | 1 | - | - | - | 1 | - | - |
| | Portateglie sx | tray-slides left | glissières gauche | Einschubschienen links | NGO0046-00 | 1 | 1 | - | - | - | 1 | - | - |
| | Portateglie dx | tray-slides right | glissières droit | Einschubschienen rechts | NGO0047-00 | - | - | 1 | 1 | - | - | 1 | - |
| | Portateglie sx | tray-slides left | glissières gauche | Einschubschienen links | NGO0048-00 | - | - | 1 | 1 | - | - | 1 | - |
| | Portateglie dx | tray-slides right | glissières droit | Einschubschienen rechts | C12.0046.00 | - | - | - | - | 1 | - | - | 1 |
| | Portateglie sx | tray-slides left | glissières gauche | Einschubschienen links | C12.0047.00 | - | - | - | - | 1 | - | - | |
| 25 | Guarnizione camera | cooking chamber gasket | joint chambre de cuisson | Türdichtung | NGO0004-00 | 1 | 1 | 1 | 1 | 1 | 1 | 1 | 1 |
| 26 | Manopola | knob | manette | Knopf | C9788-00 | 2 | 2 | 2 | 2 | 2 | - | - | - |
| 27 | Lampada spia verde | green pilot lamp | voyant vert | Grün Kontrollampe | C5410-00 | 1 | 1 | 1 | 1 | 1 | - | - | - |
| 28 | Lampada spia arancio | orange pilot lamp | voyant orange | Orange Kontrollampe | C5411-00 | 1 | 1 | 1 | 1 | 1 | - | - | - |
| 29 | Pulsante | push button | bouton | Knopf | C5421-00 | 1 | 1 | 1 | 1 | 1 | - | - | - |
| 30 | Termostato | thermostat | thermostat | Thermostat | LC-375 | 1 | 1 | 1 | 1 | 1 | - | - | - |
| 31 | Timer | timer | minuterie | Timer | LC-366 | 1 | 1 | 1 | 1 | 1 | - | - | - |
| 32 | Griglia ventilazione | ventilation grid | grille de ventilation | Lüftunsgitter | NGO0040-00 | 2 | 2 | 2 | 2 | 2 | 2 | 2 | 2 |
| 33 | Equipotenziale | equipotential | équipontential | Equipotential | LC-413 | 1 | 1 | 1 | 1 | 1 | 1 | 1 | 1 |
| 34 | Porta | oven door | porte du four | Tür | C14.0167.00 | 1 | 1 | 1 | 1 | 1 | 1 | 1 | 1 |
| 34a | Vetro interno | internal glass | verre intérieure | Innenglass | DP0001-00 | 1 | 1 | 1 | 1 | 1 | 1 | 1 | 1 |
| 34b | Supporto vetro superiore | upper glass support | support verre sup. | Obereglass | HC-801 | 1 | 1 | 1 | 1 | 1 | 1 | 1 | 1 |
| 34c | Supporto vetro inferiore | lower glass support | support verre inf. | Untereglass | HC-800 | 1 | 1 | 1 | 1 | 1 | 1 | 1 | 1 |
| 34d | Vetro esterno | external glass | verre extérieure | Aussenglass | C56.0041.00 | 1 | 1 | 1 | 1 | 1 | 1 | 1 | 1 |
| 34e | Maniglia | door handle | poignée de porte | Türgriff | NGO0014-00 | 1 | 1 | 1 | 1 | 1 | 1 | 1 | 1 |