11/2016

Mod: EDI/F104

Production code: 65/40 FRE10-D

Diamond
catering equipment

Mod./Type:	_65/... FRE...-D	cod./num.	2532358.00
		data/date:	07/11/2016

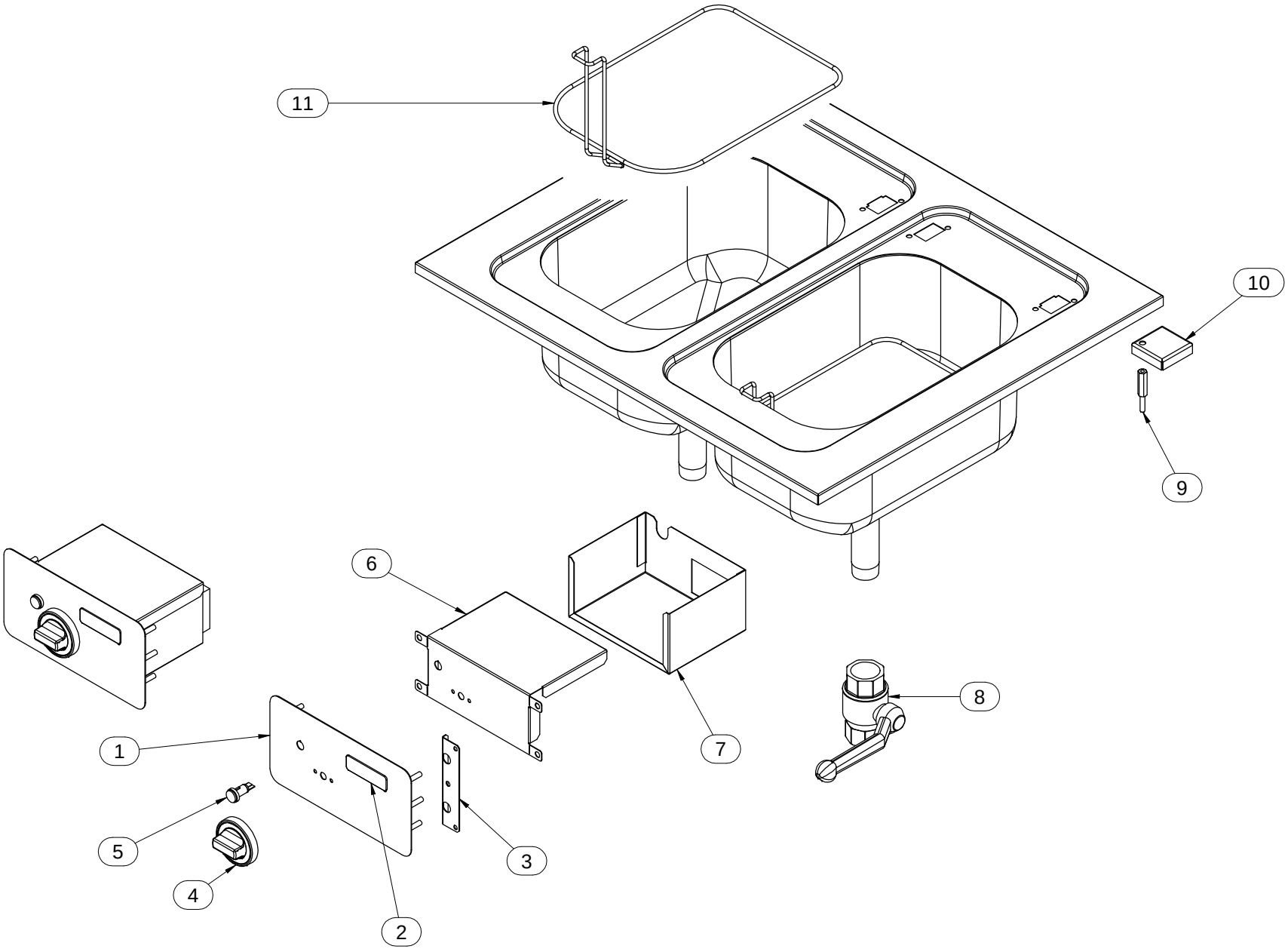

Mod.:	_65/… FRE...-D			cod. / num. 2532361.00 data / date 07/11/2016 rif. / ref. 2532358.00		RICAMBI CONSIGLIATI - RECOMMENDED SPARE PARTS - PIÈCES DÉTACHÉES RECOMMANDÉES - EMPFOHLENEN ERSATZTEILE	65/40 FRE10-D	65/70 FRE10-D	65/40 FRE10 2-D	65/70 FRE10 2-D	NOTE
POS.	DESCRIZIONE	DESCRIPTION	DENOMINATION	BENENNUNG	COD.		Q.ty				
1	CRUSCOTTO	CONTROL PANEL	BANDEAU	BEDIENBLENDE	6111978.00		1	2	1	2	
2	MARCHIO	BRAND NAME	MARQUE	MARKENZEICHEN	250.605.00		1	2	1	2	
3	STAFFA	BRACKET	SUPPORT	HALTERUNG	623.611.00		2	4	2	4	
4	MANOPOLA	KNOB	BOUTON	DREHKNOPF	612.072.00	*	1	2	1	2	
5	LAMPADA SPIA ARANCIO	ORANGE INDICATOR LIGHT	LAMPE TEMOIN ORANGE	ORANGE KONTROLLAMPE	663.044.00		1	2	1	2	
6	CHIUSURA	LOCK	FERMETURE	SCHLUSS	6212293.00		1	2	1	2	
7	SCATOLA	BOX	BOÎTE	GEHÄUSE	6212290.00		1	2	1	2	
8	VALVOLA	VALVE	SOUPAPE	VENTIL	678.007.00		1	2	1	2	
9	PERNO	PIVOT	PIVOT	STIFT	641.000.00		4	4	4	4	
10	STAFFA	BRACKET	SUPPORT	HALTERUNG	623.604.00		4	4	4	4	
11	FILTRO	FILTER	FILTER	FILTER	683.001.23		1	2	1	2	
12											
13											
14											
15											
16											
17											
18											
19											
20											
21											
22											
23											
24											
25											
26											
27											
28											
29											
30											
31											
32											
33											
34											

Mod./Type: **_65/... FRE...-D**

cod./num. 2532360.00

data/date: 08/11/2016

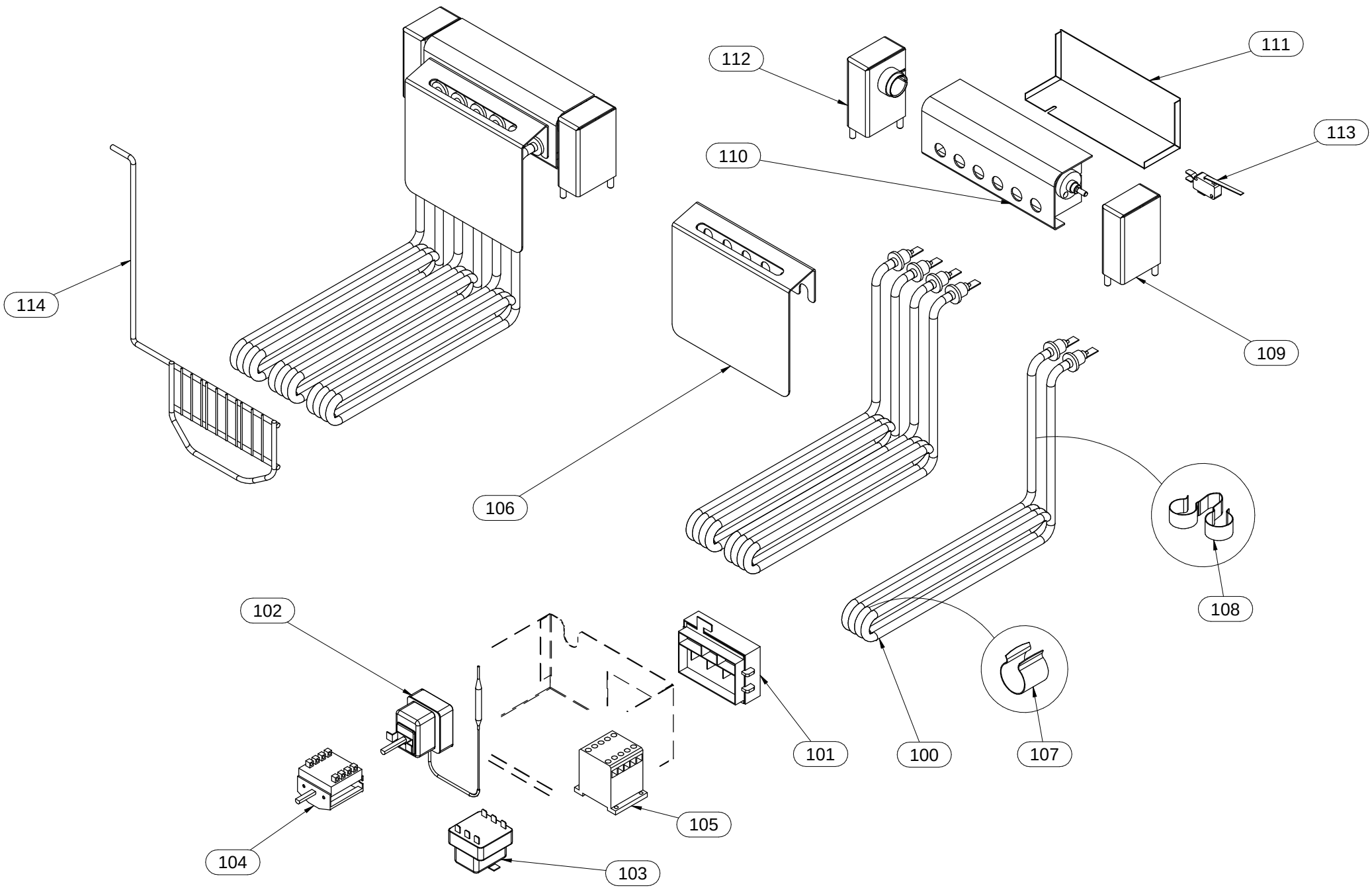

Mod.:	_65/… FRE…-D			cod. / num. 2532361.00 data / date 08/11/2016 rif. / ref. 2532360.00		RICAMBI CONSIGLIATI - RECOMMENDED SPARE PARTS - PIÈCES DÉTACHÉES RECOMMANDÉES - EMPFOHLENEN ERSATZTEILE	65/40 FRE10-D	65/70 FRE10-D	65/40 FRE10 2-D	65/70 FRE10 2-D	NOTE
POS.	DESCRIZIONE	DESCRIPTION	DENOMINATION	BENENNUNG	COD.		Q.ty				
100	RESISTENZA	HEATING ELEMENT	RESISTANCE	HEINZELEMENT	665.028.00	*	3	6	3	6	
101	MORSETTIERA	TERMINAL BOARD	BORNES	KLEMMENBRETT	663.040.00		1	2	1	2	
102	TERMOSTATO	THERMOSTAT	THERMOSTAT	THERMOSTAT	661.041.12	*	1	2	1	2	
103	TERMOSTATO SICUREZZA	SAFETY THERMOSTAT	THERMOSTAT DE SECURITÉ	TEMPERATURBEGRENZER	661.048.00	*	1	2	1	2	
104	COMMUTATORE	CHANGE-OVER SWITCH	COMMUTATEUR	UMSCHALTER	661.000.00	*	1	2	1	2	
105	CONTATTORE	CONTACTOR	CONTACTEUR	FERNSCHALTER	461.021.00	*	-	-	1	2	
106	PROTEZIONE	PROTECTION	PROTECTION	SCHUTZ	6211397.12		1	2	1	2	
107	CLIPS BULBO	BULB CLIPS	CLIPS DU BULB	CLIPS GLÜHBIRNE	238.003.00		4	8	4	8	
108	CLIPS CAPILLARE	CAPILLARY CLIPS	CLIPS CAPILLAIRE	CLIPS KAPILLARE	238.002.00		3	6	3	6	
109	COLONNINA DESTRA	RIGHT COLUMN	COLONNE DE DROITE	LINKE SÄULE	256.505.00	*	1	1	2	2	
110	SUPPORTO RESISTENZE	HEATING ELEMENTS SUPPORT	SUPPORT ÉLÉMENTS CHAUFFANTS	HEIZELEMENTE TRÄGER	256.506.00	*	1	1	2	2	
111	PROTEZIONE	PROTECTION	PROTECTION	SCHUTZ	621.812.00		1	2	1	2	
112	COLONNINA SINISTRA	LEFT COLUMN	COLONNE DE GAUCHE	RECHTE SÄULE	256.507.00	*	1	1	2	2	
113	MICROINTERRUTTORE	MICROSWITCH	MICROINTERRUPTEUR	SICHERUNGSSCHALTER	761.004.00	*	2	4	1	2	
114	BLOCCO RESISTENZE	HEATING ELEMENTS LOCK	BLOCAGE ÉLÉMENTS CHAUFFANTS	HEIZELEMENTEBLOCKIERUNG	683.007.00		1	2	1	2	
115											
116											
117											
118											
119											
120											
121											
122											
123											
124											
125											
126											
127											
128											
129											
130											
131											
132											
133											
134											
135											
136											
137											
138											