11/2016

Mod: EDI/PLCD4

Production code: 65/40 FTE-CR-D

Diamond
catering equipment

Mod./Type:	_65/... FT...E...-D	cod./num.	2532343.00
		data/date:	02/11/2016

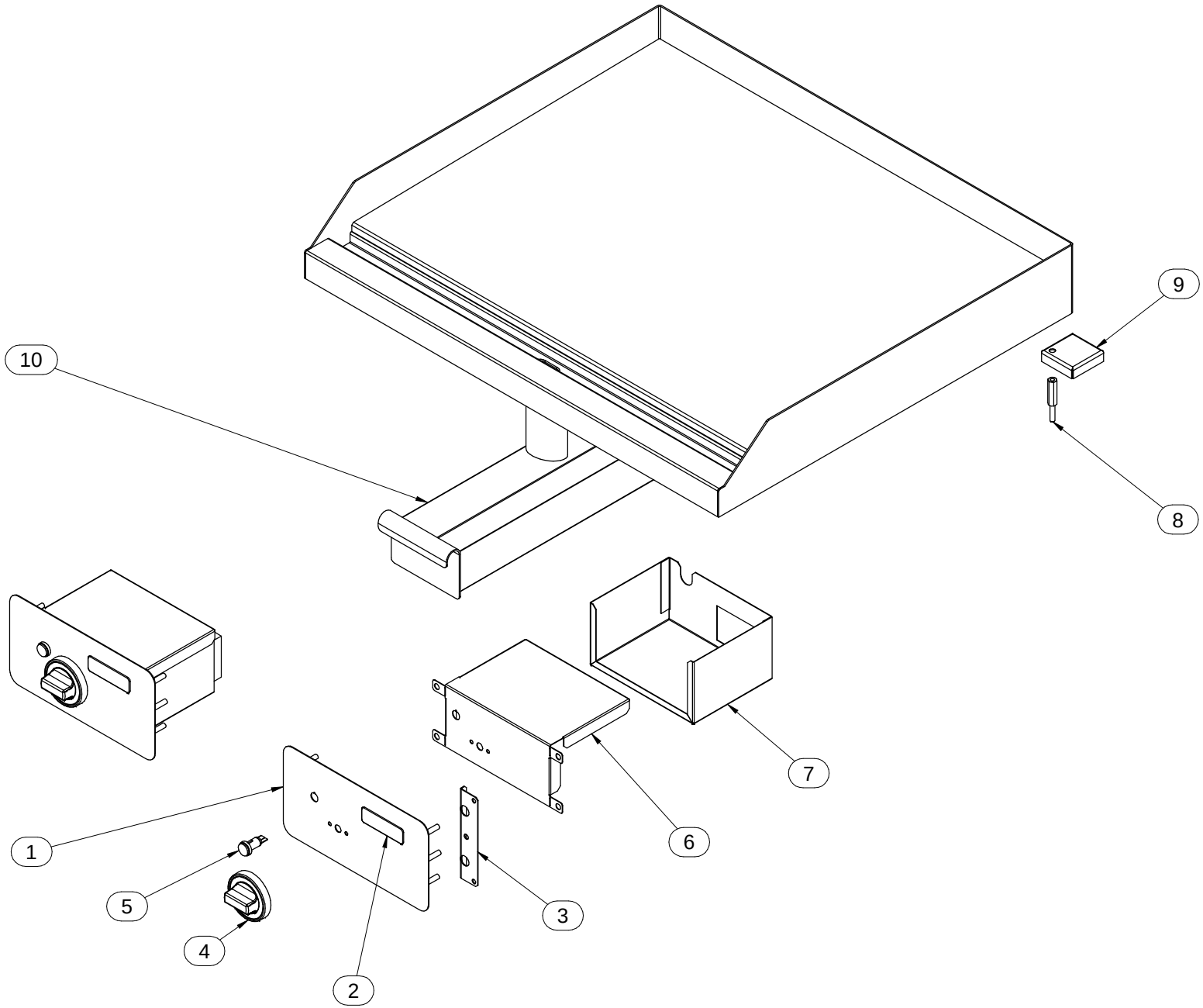

Mod.:	_65/… FT...E...-D			cod. / num. 2532347.00 data / date 02/11/2016 rif. / ref. 2532343.00		RICAMBI CONSIGLIATI - RECOMMENDED SPARE PARTS - PIÈCES DÉTACHÉES RECOMMANDÉES - EMPFOHLENEN ERSATZTEILE	65/40 FT…E-D	65/40 FTE-CR-D	65/70 FT…E-D	65/70 FTE-CR-D	65/40 FT…E 2-D	65/40 FTE-CR 2-D	65/70 FT…E 2-D	65/70 FTE-CR 2-D	NOTE
POS.	DESCRIZIONE	DESCRIPTION	DENOMINATION	BENENNUNG	COD.		Q. ty								
1	CRUSCOTTO	CONTROL PANEL	BANDEAU	BEDIENBLENDE	6111978.00		1	1	2	2	1	1	2	2	
2	MARCHIO	BRAND NAME	MARQUE	MARKENZEICHEN	250.605.00		1	1	2	2	1	1	2	2	
3	STAFFA	BRACKET	SUPPORT	HALTERUNG	623.611.00		2	2	4	4	2	2	4	4	
4	MANOPOLA	KNOB	BOUTON	DREHKNOPF	612.071.00	*	1	1	2	2	1	1	2	2	
5	LAMPADA SPIA ARANCIO	ORANGE INDICATOR LIGHT	LAMPE TEMOIN ORANGE	ORANGE KONTROLLAMPE	663.044.00		1	1	2	2	1	1	2	2	
6	CHIUSURA	LOCK	FERMETURE	SCHLUSS	6212293.00		1	1	2	2	1	1	2	2	
7	SCATOLA	BOX	BOÎTE	GEHÄUSE	6212290.00		1	1	2	2	1	1	2	2	
8	PERNO	PIVOT	PIVOT	STIFT	641.000.00		4	4	4	4	4	4	4	4	
9	STAFFA	BRACKET	SUPPORT	HALTERUNG	623.604.00		4	4	4	4	4	4	4	4	
10	CASSETTO	DRAWER	TIROIR	SCHUBLADE	6111749.00		1	1	1	1	1	1	1	1	
11															
12															
13															
14															
15															
16															
17															
18															
19															
20															
21															
22															
23															
24															
25															
26															
27															
28															
29															
30															
31															
32															
33															
34															
35															
36															
37															
38															
39															

Mod./Type:	_65/... FT...E...-D	cod./num.	2532345.00
		data/date:	02/11/2016

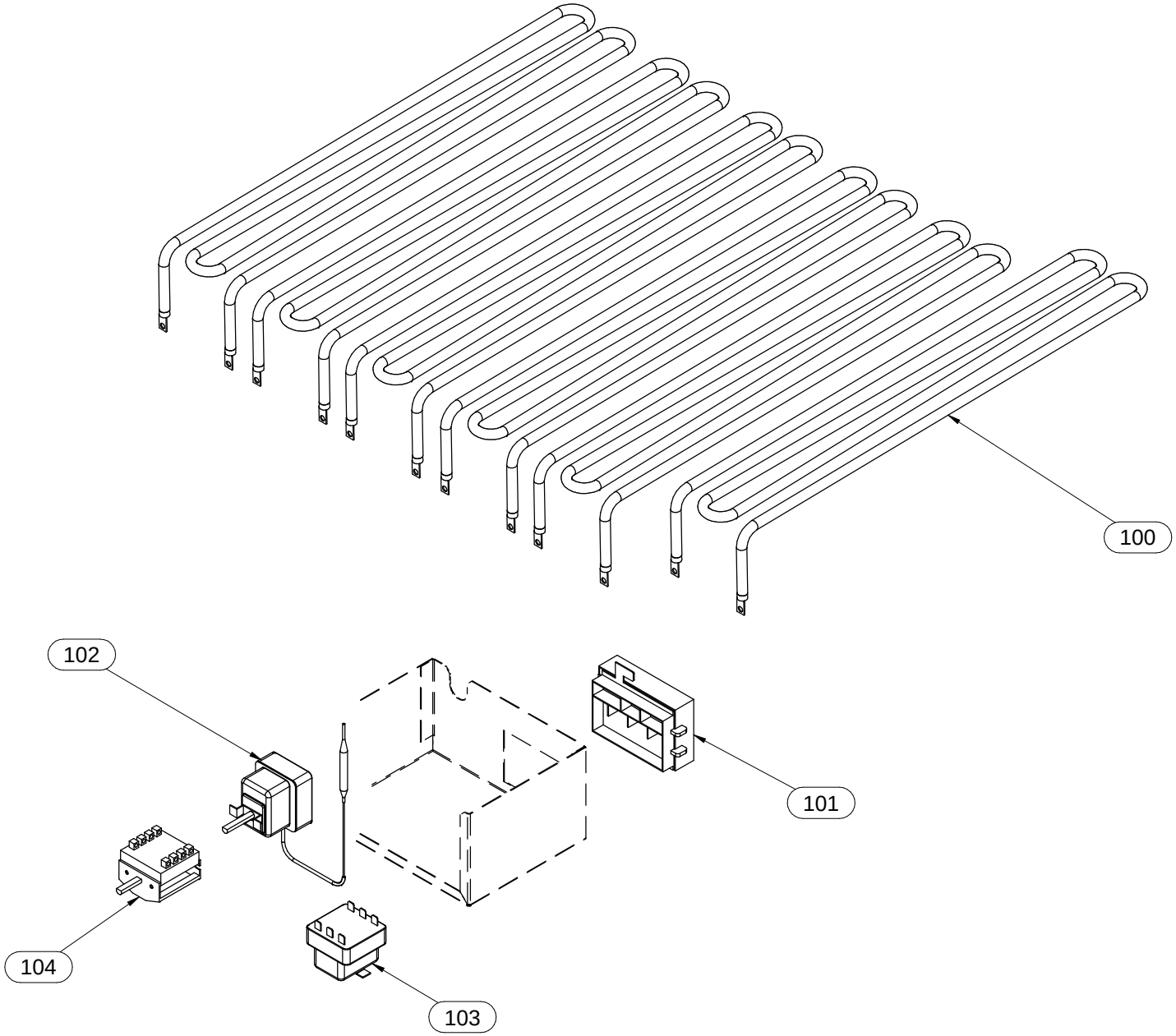

Mod.:	_65/… FT…E…-D			cod. / num. 2532346.00 data / date 02/11/2016 rif. / ref. 2532345.00		RICAMBI CONSIGLIATI - RECOMMENDED SPARE PARTS - PIÈCES DÉTACHÉES RECOMMANDÉES - EMPFOHLENEN ERSATZTEILE	65/40 FT…E-D	65/40 FT…E-CR-D	65/70 FT…E-D	65/70 FT…E-CR-D	65/40 FT…E 2-D	65/40 FT…E-CR 2-D	65/70 FT…E 2-D	65/70 FT…E-CR 2-D	NOTE
POS.	DESCRIZIONE	DESCRIPTION	DENOMINATION	BENENNUNG	COD.		Q.ty								
100	RESISTENZA	HEATING ELEMENT	RESISTANCE	HEINZELEMENT	665.002.00	*	3	3	6	6	3	3	6	6	
101	MORSETTIERA	TERMINAL BOARD	BORNES	KLEMMENBRETT	663.040.00		1	1	2	2	1	1	2	2	
102	TERMOSTATO	THERMOSTAT	THERMOSTAT	THERMOSTAT	661.007.00	*	1	1	2	2	1	1	2	2	
103	TERMOSTATO SICUREZZA	SAFETY THERMOSTAT	THERMOSTAT DE SECURITE	TEMPERATURBEGRENZER	661.045.00	*	1	1	2	2	1	1	2	2	
104	COMMUTATORE	CHANGE-OVER SWITCH	COMMUTATEUR	UMSCHALTER	661.000.00	*	1	1	2	2	1	1	2	2	
105															
106															
107															
108															
109															
110															
111															
112															
113															
114															
115															
116															
117															
118															
119															
120															
121															
122															
123															
124															
125															
126															
127															
128															
129															
130															
131															
132															
133															
134															
135															
136															
137															
138															
139															
140															