04/2013

Mod: ES6/PLT-N

Production code: FTH-30 EL

Diamond
catering equipment

CONTENT

Declaration of conformity standards	3
Technical data	3
Installation	4
Placement of the device	4
Chart	5
Connection of the electric cable to electricity	6
Maintenance	6
Instructions for use	6
Comments and recommendation	6
Cleaning and maintenance	7
Process in case of wrong function of the device	7

DECLARATION OF A STANDARDS CONFORMITY

The producer confirms that the devices agree with CEE 90/396 standards, rule nr. 22/1997 sb. and with relevant government orders. Installation must be done with respect to valid standards. Attention, the producer refuses any responsibility in case of direct or indirect damages which are caused due to wrong installation, incorrect intervention or modification, insufficient maintenance, incorrect use and also possibly caused by other reasons presented by items in sale conditions. This appliance is set only for skilled use and must be operated by qualified persons only. Parts set and secured by the producer or accredited person must not be rebuilt by user.

TECHNICAL DATA

Label with technical data is placed on the back side of the device. Study the electrical diagram of connection and all following information before installation.

Model	Weight (kg)	Power (kW)	Voltage (V)
FTH – 30 EL	28	3,0	230
FTR – 30 EL	28	3,0	230
FTH – 60 EL	53	6,0	400
FTHR – 60 EL	53	6,0	400

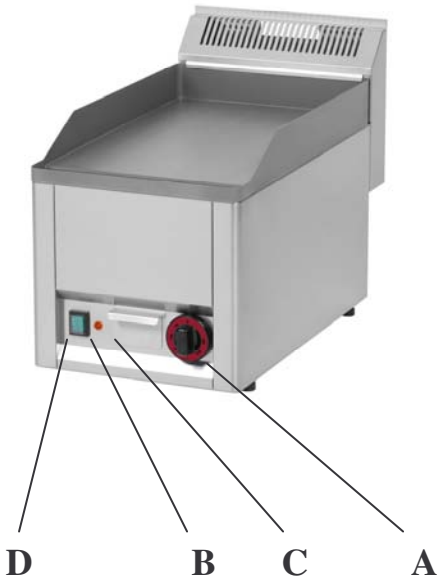

DIMENSIONS

FTH-30,60 EL

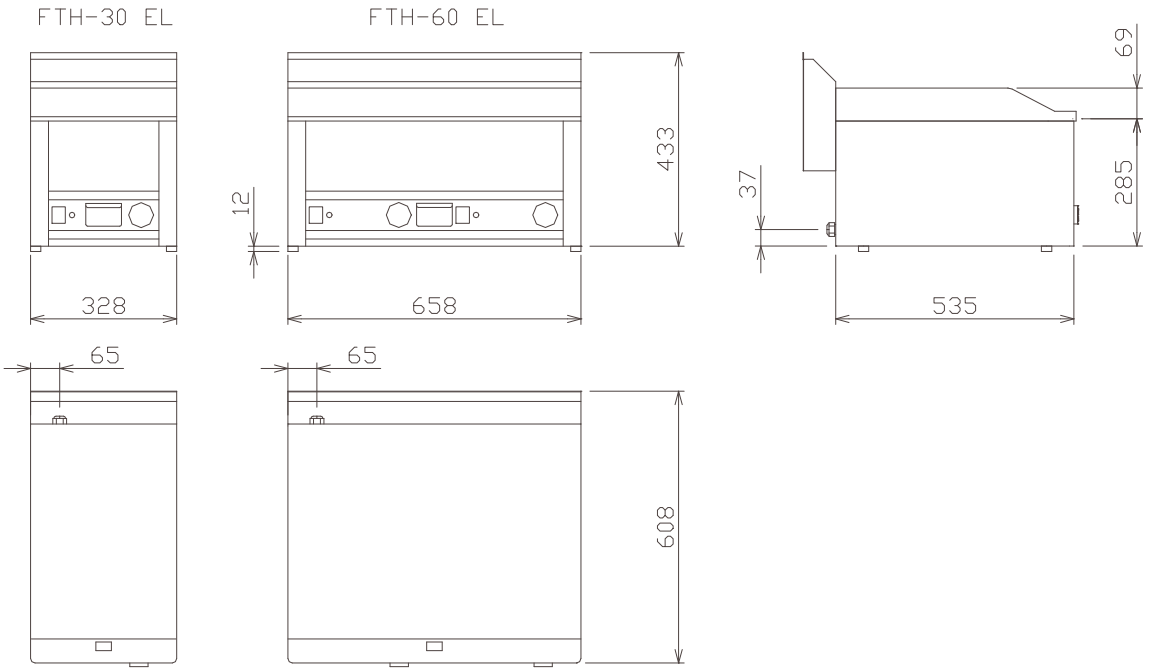

FTR-30,FTHR-60 EL

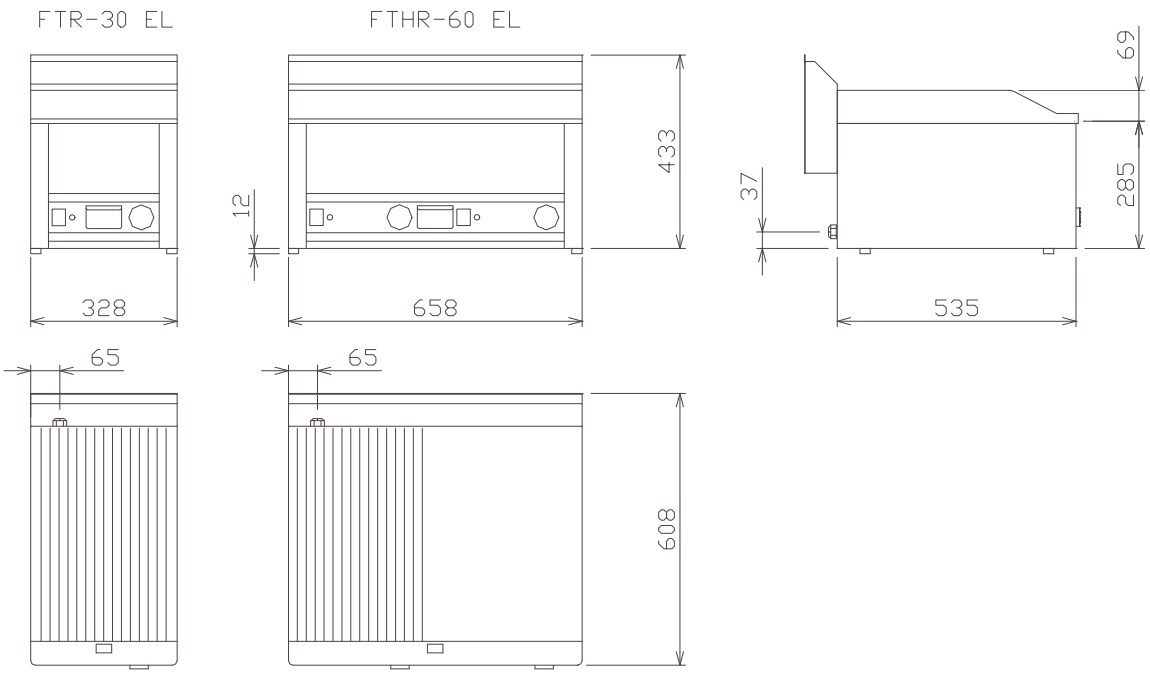

PACKING AND DEVICE CHECK

The device leaves our stocks properly packed with appropriate symbols and labels. There are also appropriate instructions for use. In case the packing shows bad handling or damage, it must be reclaimed at forwarder immediately by writing and signing of a damage protocol.

Important notice

- this instructing guide must be read properly and carefully because it contains important information about safety elements, installation, use
- these recommendations refer to this product
- this product corresponds with valid standards
- this guide must be properly deposited for future use
- keep the children away from manipulation with the product
- when selling or moving the product to another place it is necessary to make yourself sure that the staff or the professional service has got acquainted with control and installation instructions from enclosed guide,
- only authorised person can operate the product
- the device can be used only for grilling and baking food
- it cannot be switched on without supervision
- we recommend to have the product checked by professional service min. once a year
- only original spare parts can be used for repairs
- the product cannot be cleaned by the water jet or pressure shower
- by damage or break down disconnect all the feeders (water, gas, electricity) and call professional service
- producer refuses any responsibility in case of damages caused by wrong installation, by disobserving of above mentioned recommendations or by other use etc.

Technical instructions for instalation and regulation:

Can be used ONLY by specialised technicians. Following instructions apply to the technician specialised in installation to do all the operations in the most correct way and according to the valid standards!!!

Important

Any activity connected with regulation etc. must be done only when the device is disconnected from electricity. If it is necessary to have the device connected to the electricity (during regulation) you must be very careful.

PLACEMENT

The device must be installed in well ventilated room what is necessary for regulation of the function of the device (technician must go by valid standard ČSN....). If the device is situated

close to the wall or if it is in contact with the furniture walls, these walls must resist the temperatures ranging to 60°C. Installation, setting, putting into operation must be done by qualified person who is competent for this and according to the valid standards.

Wrap up the device and check whether it was not damaged during transport. Settle the device on horizontal surface (max imbalance 2°). Settle the device under the fumehood to eliminate water steam and bad smell. The device can be installed separately or in a set with devices of our production. Min. distance 10 cm from other subjects must be kept. It is also necessary to prevent our product from contact with combustible materials. In this case you must make corresponding changes to secure heat isolation of combustible parts.

SAFETY MEASURES FROM THE STANDPOINT OF THE FIRE PROTECTION ACCORDING TO ČSN 061008ČL. 21:

- only adults can operate the device
- device must be safely used in common surroundings according to ČSN 332000-1
- device must be placed so as to stand or hang on the non combustible surface

No subjects from combustible materials can be placed directly on the device or in distance which is shorter than safety distance (the shortest distance is 10 cm).

- safety distances from various materials of different degree of combustion and information about the degree of comb. of common building materials - see chart:

Chart

Combustion degree of building materials classified according to the combustion degree of materials and products (ČSN 730823)

A non combustible	granit, sandstone, concretes,bricks, ceramic wallfacing tiles, plaster
B uneasily combustible	akumine, heraklite, lihnos, itavere
C1 hardly combustible	leafy wood, plywood, sirkoklit, rare paper formica
C2 middle combustible	fibreboards, solodure, cork boards, rubber,floor-coverings
C3 easily combustible	wood-fibreboards, polystyrene,polyurethane, PVC

Devices must be installed in a safe way. When installing you must respect corresponding project, safety and hygienic orders according to:

- ČSN 061008 fire protection of local devices and sources of heat
- ČSN 332000 surrounding for electric devices

CONNECTION OF THE ELECTRIC CABLE TO THE ELECTRICITY

Installation of electric feeder - This feeder must be separately protected by a safety fuse according to the specific electric stream which depends on the wattage of the installed device. Check the wattage on the label at the back of the device. Connect the device directly to the electricity but you must put the switch between the device and electric net. The switch must be placed in min. distance 3 mm between the particular contacts according to the standards and loading. The feeder of grounding (yellow-green) cannot be interrupted by this switch.

In every case feeding cable must be placed so that no point of the cable will reach the temperature which is 50°C higher than the temperature of the surrounding. Before connecting the device check that:

- safety fuse of the feeder and inner mains can stand the loading of the device (see label of the matrix)
- mains are equipped with effective grounding according to standards (ČSN) and conditions given by law
- socket or switch of the feed is well accessible from device

We refuse any responsibility in case of not respecting above mentioned rules.

Before the first use it is necessary to remove all the protection foil and to clean the device - see chapter "cleaning and maintenance". We recommend you to leave the device empty when switching it on for the first time. Switch the device for the full power approx. for 15-20 min to burn the top.

INSTRUCTION FOR USE

Attention!

Before the first use of the device wash the device with water containing detergent and than dry with the cleaning cloth. Never leave the device on without supervision!!!

Drawer for superfluous fat

You must check the drawer regularly and empty it in time. You must clean the drawer after each switching the device off.

Comments and recommendation

The devices with separated surface into 2 halves (FT-60) can be adjusted for different temperatures on both of the halves. You can also use only one half.

Switch on by main switch (D), turn the knob (A) and adjust required performance. Pilot lamps (B) and (C) will light. Pilot lamp (B) lights when the device is connected to the electricity and switched on. Pilot lamp (C) lights when the heating spirals are on. Pilot lamp (C) goes out when the device reaches adjusted temperature. Switch the device off by turning the knob (A) into position "0" and switch off the main switch (D).

Maintenance

We recommend to have the device checked once a year by the professional service. Only qualified or competent persons can do interventions in the product.

Comments and recommendation

Use the device only under supervision.

CLEANING AND MAINTENANCE

ATTENTION! The device cannot be cleaned by direct or pressure water. Clean it daily. Daily maintenance keeps longer useful life and efficiency of the device. Before cleaning make sure to have disconnected the device from electricity. Always switch off the main feeder to the device. Stainless parts wash with moist cleaning cloth and non abrasive detergent than dry it by the cloth. Do not use abrasive and corrosive detergents. All food residues must be removed from the surface, you can use scraper. **You must lubricate the top with vegetable oil after each cleaning.**

WHAT TO DO IN CASE OF BREAK-DOWN

Switch off the electric feeder and call seller´s professional service.

Indication

Guarantee does not cover all consumption parts succumable to common wear (rubber seals, bulbs, glass and plastic parts etc.). The guarantee does not refer to the devices which were not installed in correspondence with instructions - by qualified worker, in conformity with standards and when somebody handled incompetently the device (interventions into inner equipment) or the device was operated by non qualified staff or at variance with instructions for use. Guarantee does not also cover the damages caused due to influence of nature or other outer intervention.

WIRING DIAGRAM : FT - 30 EL

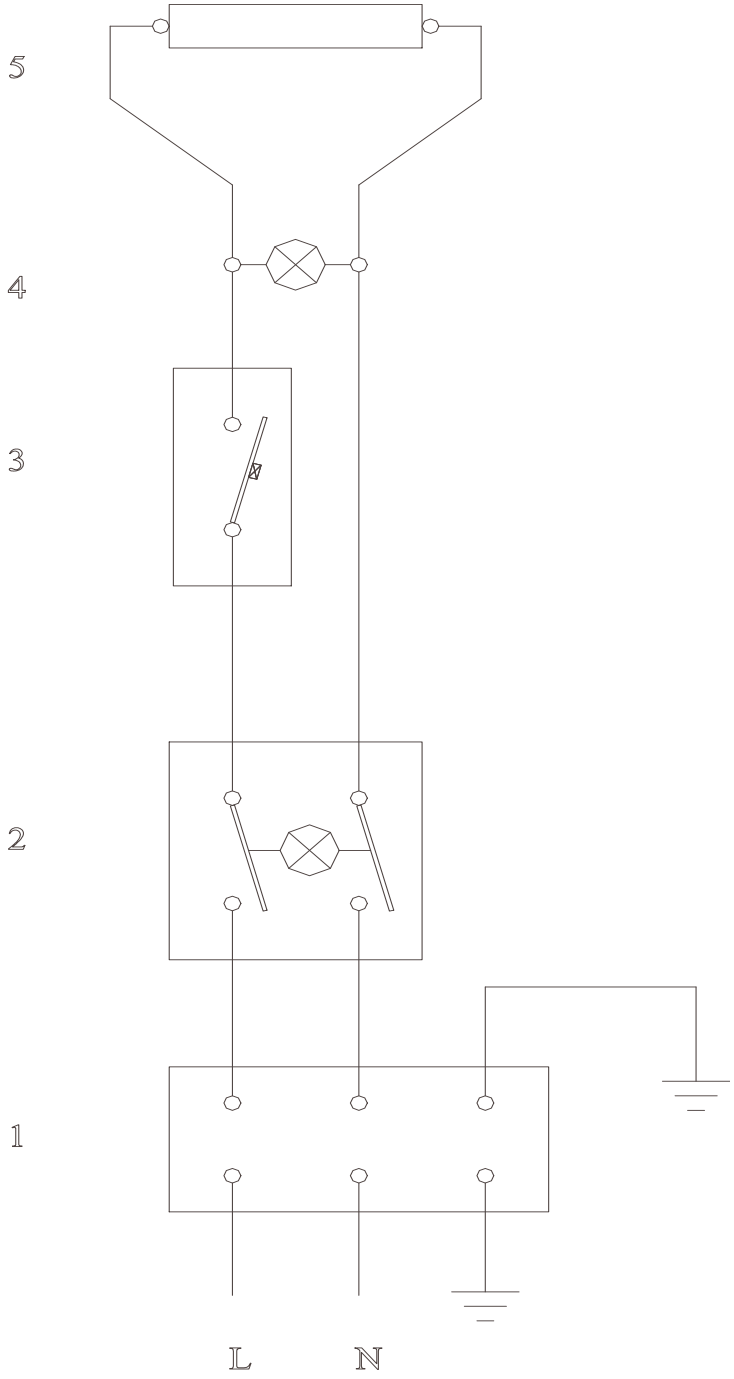

1 – terminal board
2 – backlit switch
3 – termostat
4 – orange kontrol light
5 – heating element

WIRING DIAGRAM : FT - 60 EL

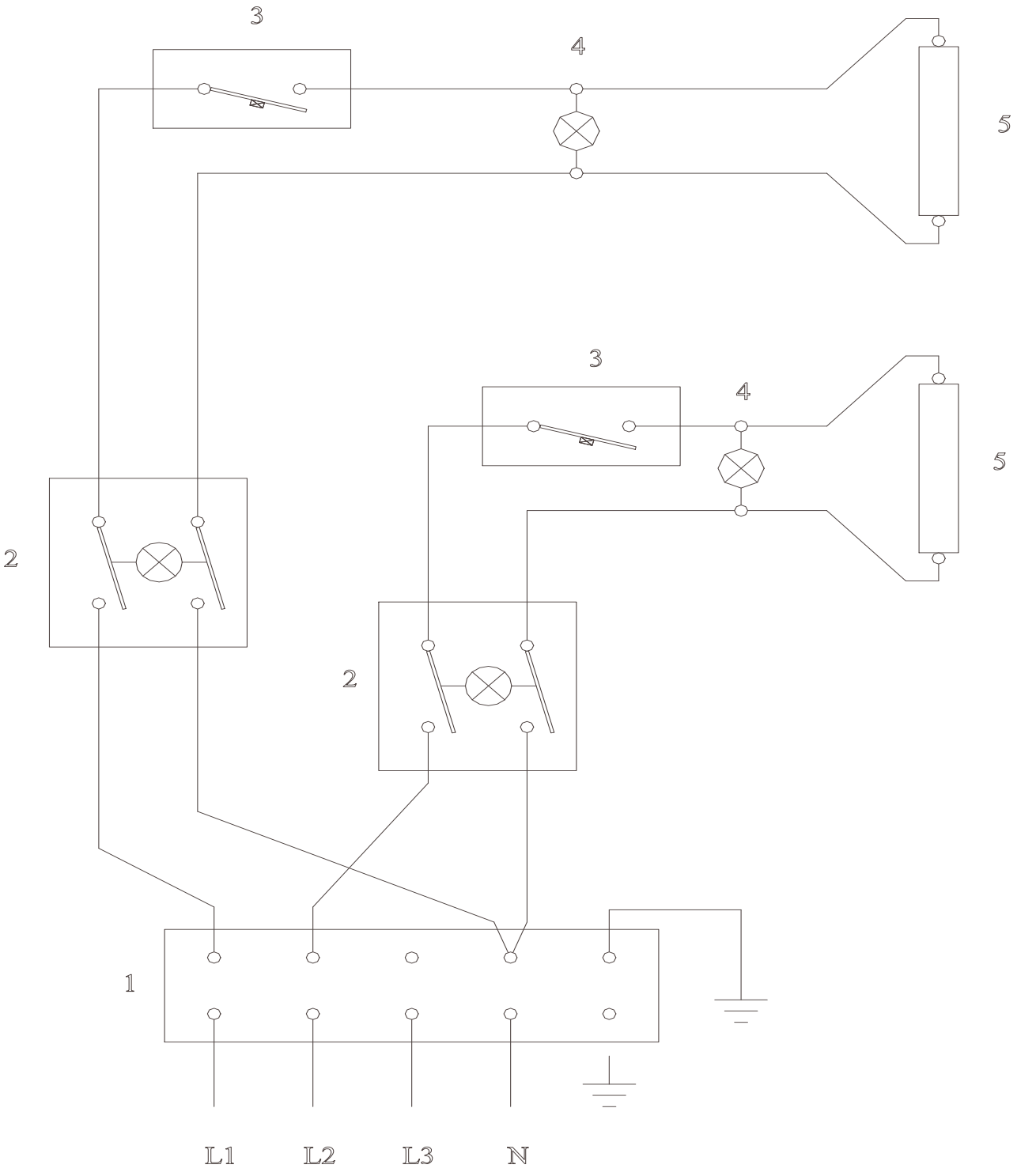

1 – terminal board
2 – backlit switch
3 – termostat
4 – orange kontrol light
5 – heating element