04/2013

Mod: SAX-165/9

Production code: 24160802F

Diamond
catering equipment

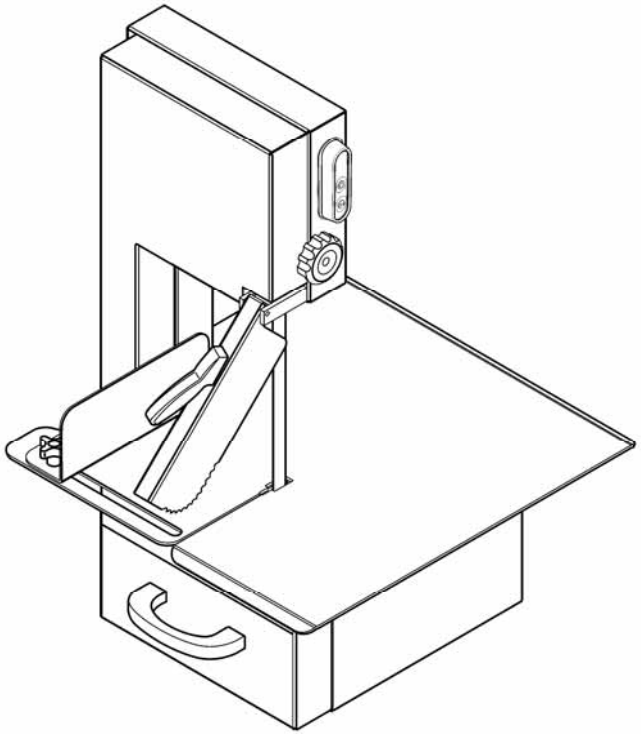

OPERATING AND MAINTENANCE MANUAL

INDEX

Declaration of Conformity

DICHIARAZIONE DI CONFORMITA' CE
DECLARATION OF CONFORMITY CE
DECLARATION DE CONFORMITE CE
CE - KONFORMITÄTERKLÄRUNG
DECLARACION DE CONFORMIDAD CE
СЕРТИФИКАТ СООТВЕТСТВИИ CE

La ditta:	**SIRMAN spa**
Company:	**Viale Dell'Industria, 9/11**
La société:	**35010 Pieve di Curtarolo (PD) Italy**
Die Firma:	**C.F. / P.IVA 00270140288**
La empresa:	
Фирма:	

dichiara che:	**il segaossa**
declares that:	the bone saw
déclare que:	la scie à os
erklärt, daß:	die Knochensäge
declara que:	la sierra de huesos
объявляет, что	пила для костей

SIRMAN

SO 1650 INOX (CE) **modello** / model / modèle / Modell / modelo / модель
_____ **n° matricola** / serial number / numéro de série / Gerätenummer / matrícula nro. / серийный номер

è conforme alla direttiva CEE 98/37, 89/336, 73/23, 89/109.
complies with EEC Directives 98/37, 89/336, 73/23, 89/109.
est conforme aux Directives CEE 98/37, 89/336, 73/23, 89/109.
den EWG Richtlinien 98/37, 89/336, 73/23, 89/109 entspricht.
cumple con las prescripciónes de la directiva CEE 98/37, 89/336, 73/23, 89/109.
соответствует требованиям Директив ЕЭС 98/37, 89/336 (ЭМС), 73/23, 89/109.

Certificato d'esame CE n° 01855/99 rilasciato da:
Test report n° 01855/99 issued by:
Rapport d'essai n° 01855/99, délivré par:
Prüfbericht n° 01855/99, ausgesstellt von:
Certificado de examen nro. 01855/99, emetido para:
Протокол испытаний № 01855/99, выданный:

ISTITUTO DI CERTIFICAZIONE EUROPEA s.r.l.
Via Bentini, 9 Castel Maggiore 40013 (BO) Italy

Amministratore /Managing Director / Administrateur / Geschäftsführer /Administrator /Директор:

Nereo Marzaro

Pieve di Curtarolo, li _____

1 Delivery and guarantee

1.1 *Foreword*

ATTENTION!
This symbol draws the reader's attention to points and operations that can endanger the personal safety of operators or risk damaging the machine.
Do not use the machine unless you are certain that you have correctly understood these warnings. **F**or greater clarity, certain illustrations in this manual show the machine or parts of it with panels or casing removed. **D**o not use the machine in these conditions; all protections must be correctly fitted and in perfect working order. This manual may not be reproduced, even partially, and its contents cannot be used for purposes other than those permitted by the manufacturer. All breaches of the above are legally punishable.

1.2 Keeping and using the manual

The aim of this manual is to instruct the user, via text and figures, with regard to transport, handling, use and maintenance of the machine; the manual must therefore be carefully read before using the machine. keep it safety near the machine in an easily and quickly accessible place for future reference. If the manual is mislaid or damaged, ask your dealer or manufacturer for a copy. If the machine is sold, inform the manufacturer of the name and address of the new owner. The manual reflects the state of technology at the time the machine is sold and cannot be considered inadequate if it is subsequently updated on the basis of new knowledge. In this regard the manufacturer reserves the right to update its products and related manuals without being obliged to update previous products and manuals barring exceptional cases. If in doubt, consult the nearest servicing centre or the manufacturer. The manufacturer's aim is continuous product optimisation and it is therefore pleased to receive any comments or proposals for improvement of the machine and/or manual. The machine is delivered to the user under the guarantee conditions in force at the time of purchase. Contact your supplier for any clarifications required.

1.3 *Guarantee*

The user is not authorized to tamper with the machine for any reason. If a fault occurs, contact the manufacturer. Any attempts at dismantling or in general tampering with any component of the machine by the user or non-authorized personnel will render the guarantee null and void and exempt the manufacturer form all responsibility for any damage either to people or things deriving from the above.
The manufacturer is also exempt from all responsibility in the following cases:

- incorrect installation;
- improper use of the machine by inadequately rained personnel;
- failure to comply with the regulations in force in the country in which the machine is used;
- lack of or insufficient maintenance;
- use of non-original spare parts and spare parts not specifically designed for the model;
- total or partial failure to follow the instructions.

1.4 *Machine description*

The saw you have purchased is a safe reliable machine and easy to use.
Pulleys are made of aluminium. Machine body and accessories are made of stainless steel AISI 304. It is provided with mechanical guards (casings, doors, etc...) and electrical safety devices (micro switch, emergency stop button etc.) in order to reduce operator risks to a minimum. The pulley angle can be adjusted both horizontally and vertically in order to ensure maximum blade contact.
The motor is self-cooling, water-protected, self-braking and operates intermittently.
The push-button panel is located in an easily accessible position with the controls powered at 24 volts. The machine has been designed to facilitate cleaning operations, in particular due to the following technical features:

- easy removal of the blade and upper pulley without using tools;
- once the pulley has been removed, the machine has a smooth surface thus facilitating cleaning operations and allowing the dirt on the blade to deposit directly in the tray;
- all the electrical parts are protected to **IP 56** (minimum).

1.5 *Use*

The saw has been designed and produced to cut bones, meat and fish.
It must only be used on a work table or on the stand supplied by manufacturer.
As it is designed for food, the material used for the blade and all other components that can come into contact with the product being cut have been carefully selected.
The machine is designed for professional use and should therefore be used by a skilled operator who must carefully read this manual before using the machine.
This machine has been manufactured in compliance with the EEC directive 89/392. The saw is also suitable for cutting frozen fish and does not require any particular environmental conditions. You are nevertheless advised to keep it in a closed environment, protected from bad weather and sudden changes in temperature.

1.6 *Uses not permitted*

The saw must be used for the purposes expressly intended by the manufacturer only. In particular:

- **Do not** use the machine unless it has been correctly installed with all the guards in perfect condition and correctly fitted to avoid the risk of severe injury.
- **Do not** use the machine if the blade is not in perfect condition and correctly sharpened as the blade can break.
- **Do not** stand on machine, even if not working. Apart from the danger of falling, the machine may also be damaged
- **Do not** access the electrical components without previously disconnecting the machine: **risk of electrocution.**
- **Do not** use the machine for cutting items other than meat, bones, fish and similar.
- **Do not** stop the blade with your hands; wait until it stops to avoid the risk of serious injury.
- **Do not** wear rings, watches, jewellery, loose or hanging garments such as scarves, ties, torn clothes, unbuttoned jackets or smocks with open zip which can get tangled in the moving parts. Use approved safety clothing: non-slip shoes, safety goggles, work gloves, ear defenders and safety mask. Consult your employer re. current safety regulations and safety devices required.
- **Do not** start the machine if it is not working correctly. Before using the machine, ensure that any dangerous condition has been appropriately eliminated. If a fault occurs, stop the machine and notify the maintenance personnel.
- **Do not** allow non - authorised personnel to carry out work on the machine. In the event of an electrical accident, firstly remove the victim from the conductor (as he will usually be unconscious). This operation is dangerous as the victim is a conductor in this case and touching him can cause electrocution. You should therefore disconnect the contact directly from the line power supply valve or, if this is not possible, distance the victim using insulating material (wooden or PVC sticks, fabric, leather etc.). A doctor should be promptly called and the patient taken to hospital.
- **Do not** make any intervention without authorisation.
- **Follow** the procedures given for maintenance and technical assistance

1.7 *Identification*

specification of the “Model”, “Serial number” and “Year of manufacture” will enable our servicing department to provide a rapid efficient response. Whenever you contact the servicing department or request spare parts, always quote the above information. As a memorandum, you are advised to fill in the box shown in fig. 1.7.1 with specifications of your machine.

Bone saw model.....
Serial number.....
Year of manufacture.....
Type .....

a = bone saw model
b = serial number
c = electrical motor
d = frequency
e = power supply voltage in volts
f = machine weight in kg
g = manufacturer

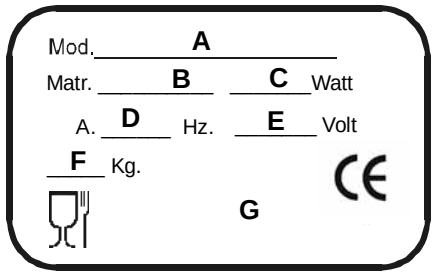

Fig. 1.7.1

!! ATTENTION !! Do not, for any reason, alter the data given on the rating plate.

1.8 *Safety devices*

Before using the machine, ensure that the safety devices are correctly positioned and in perfect condition.
At the beginning of each working shift, check that they are fitted and working efficiently; if not, notify the head of maintenance.
1 Blade working area mobile guard.

If nothing is being cut, it prevents contact with the cutting blade. (Fig. 1.8.1)

2 Casing closed control micro switch.

If the casing opens, the micro switch cuts off the electrical power supply to the machine, stopping it. When the casing is closed, the machine will not restart unless the start button has been pressed. Also in the event of accidental stoppage of the machine, for example due to a power failure, the machine will not restart when is restored unless the star button is pressed. (Fig. 1.8.1).

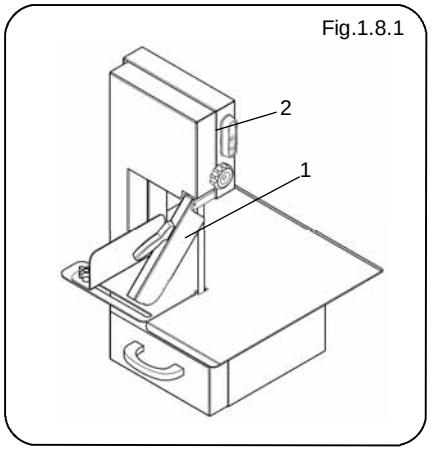

Fig.1.8.1

1.9 *Warning and danger signs*

Do not hold your hands near the blade in particular when moving.

Risk of serious injury. Do not carry out work on electrical components with the machine connected. Risk of electrocution. **Observe the precautions given in the signs. Failure to observe them can cause serious injury and even death.**

Ensure that the signs are always fitted and readable. If not, fit or replace them.

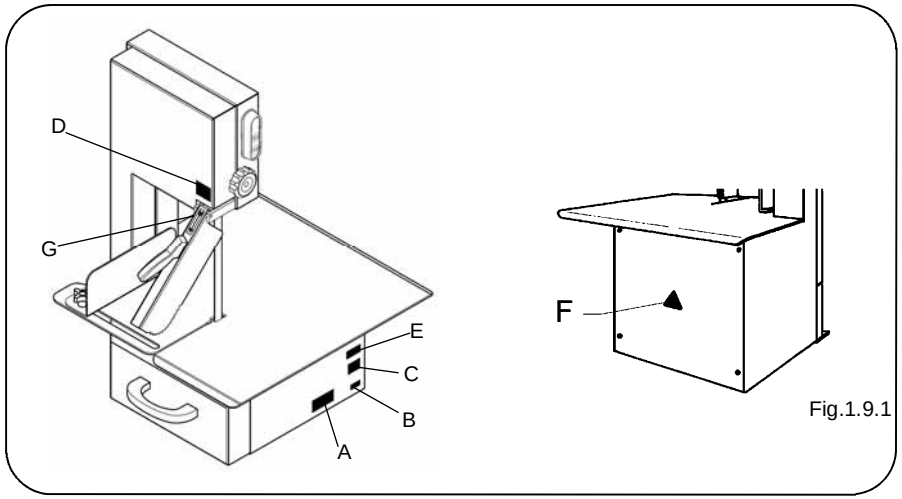

Fig.1.9.1

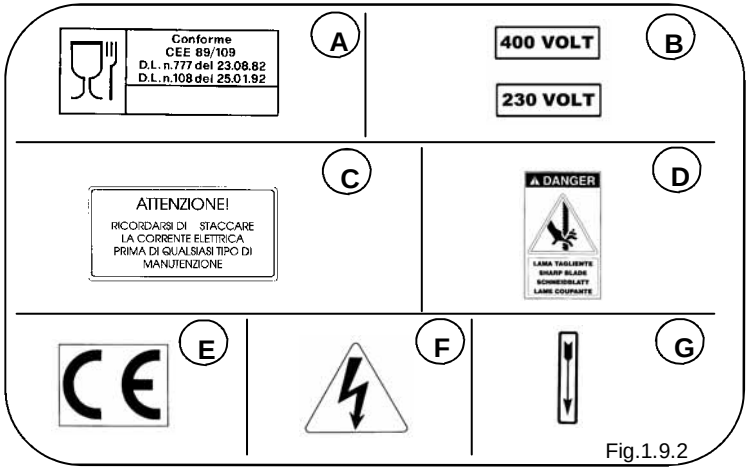

Fig.1.9.2

1.10 *Working position*

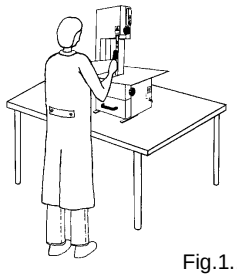

The correct operator working position is shown in fig. Fig. 1.10.1.

Fig.1.10.1

1.11 *Working condition*

The machine is created to work with the following conditions:

- minimum room temperature: -5 °C;
- maximum room temperature: +40 °C;
- relative humidity: 50% a 40 °C.

1.12 *Lighting*

Suitable lighting must be provided around the machine to ensure correct operator visibility. Lighting must be disposed in accordance with the low in force in the destination county and should not create reflections. Lighting must allow a good reading of control pannel and safety button.

1.13 *Vibration*

The vibrations that machine transmit to band are not significant.

2 Technical specification

2.1 *Main parts*

To facilitate understanding of the manual, the main machine components are listed below and shown in fig. 2.1.1

1 - Pulleys protection casing.
2 - Control panel.
3 - Portioning device.
4 - Pusher.
5 - Work top.
6 - Electrical motor.
7 - Upper driven pulley.
8 - Band cutting blade.
9 - Dirt and rest collection tray.
10 - Lower drive pulley.
11 - Electrical system.
12 - Body machine.
13 - Lever for the assembly blade.

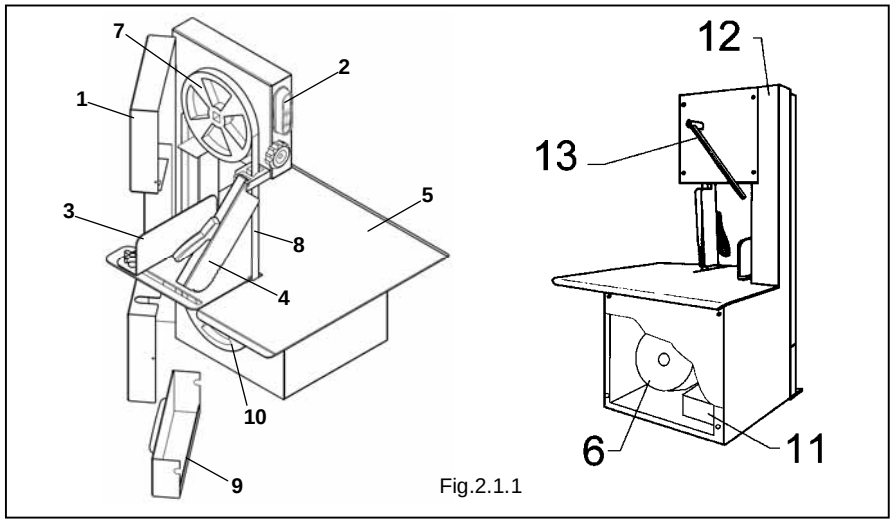

Fig.2.1.1

2.2 *Technical specifications*

Power	Speed	Pulleys diameter	Blade length	Working surface
kW	R.p.m./min	mm	mm	mm
0,75 - 1,1	900	210	1650	430 x 545

2.3 *Maximum dimensions of the product to be cut (Fig. 2.3.1)*

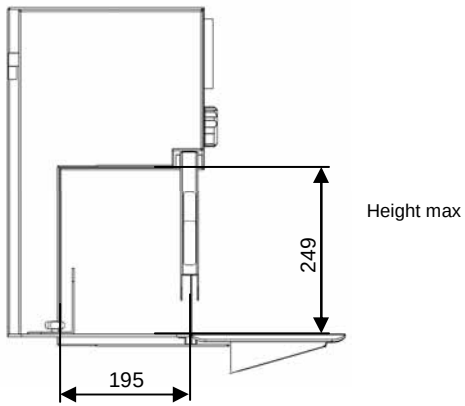

Fig.2.3.1

2.4 *Machine dimensions and weight*

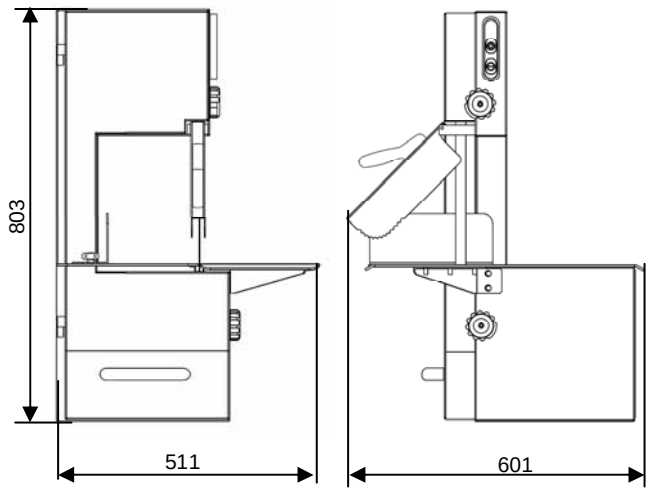

Fig.2.4.1

The machine weights **55 kg**

NOTE Measures are expressed in millimetres.

2.5 *Noise level*

Recordings of the noise emitted by the machine indicate that the equivalent noise level is **74,3 dB(A)**. On request, the manufacturer can supply a copy of the noise test.

2.6 *Wiring diagrams*

2.6.1 Three-phases wiring diagram at 400V (Fig. 2.6.1)

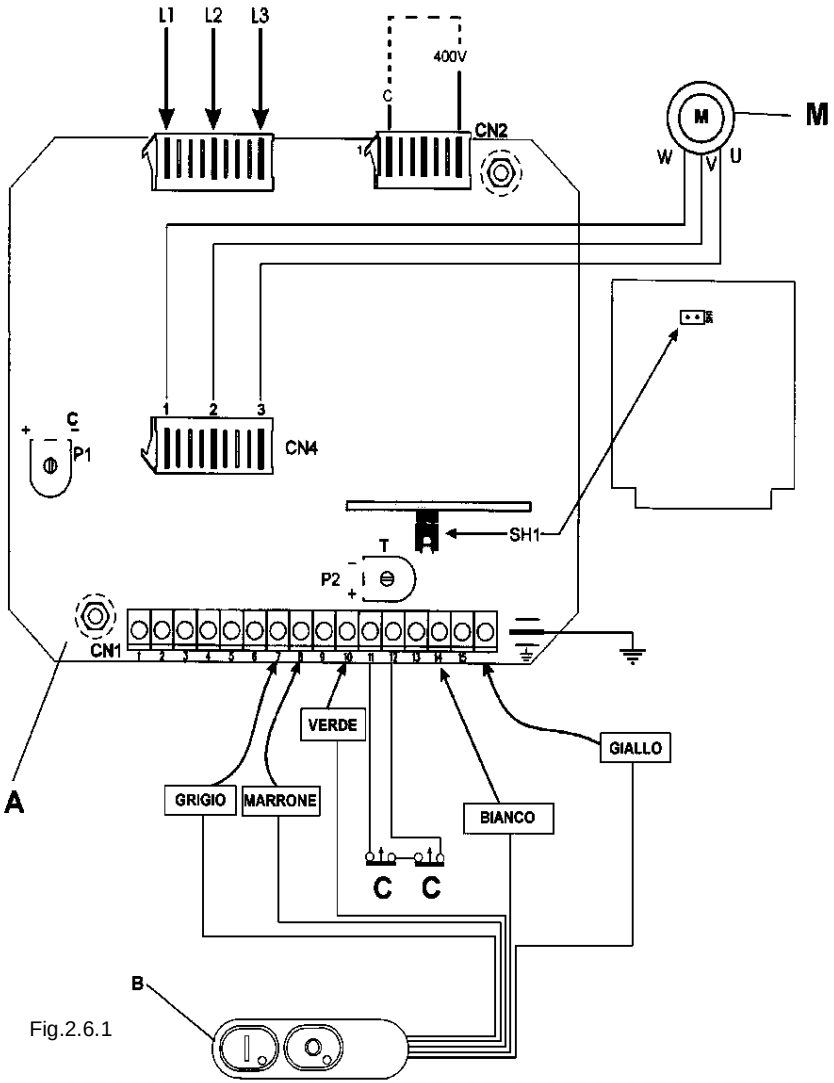

Fig.2.6.1

Key

A = self-braking motor card
B = star-stop button
C = safety microswitch
M = motor
L1, L2, L3 = three-phase line

2.6.2 Single-phase wiring diagram at 230V (Fig. 2.6.2)

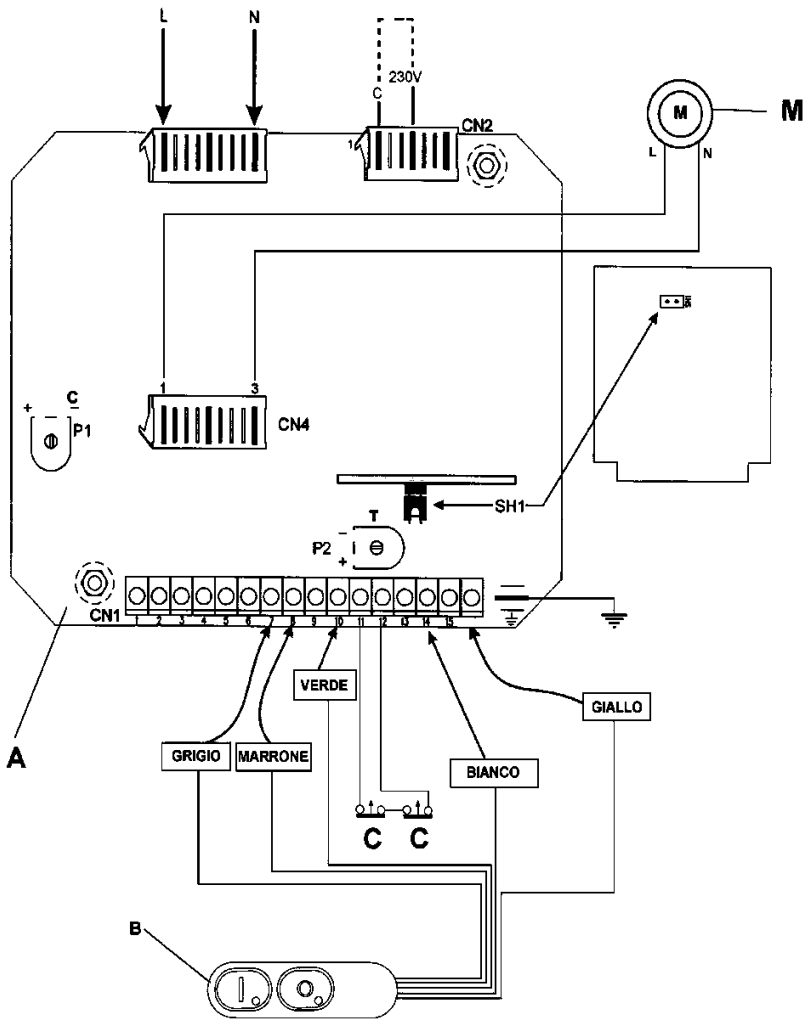

Fig.2.6.2

Key

A = self-braking motor card
B = star-stop button
C = safety microswitch
M = motor
L, N = single-phase line

2.6.3 Three-phases wiring diagram at 230 V*(fig. 2.6.3)*

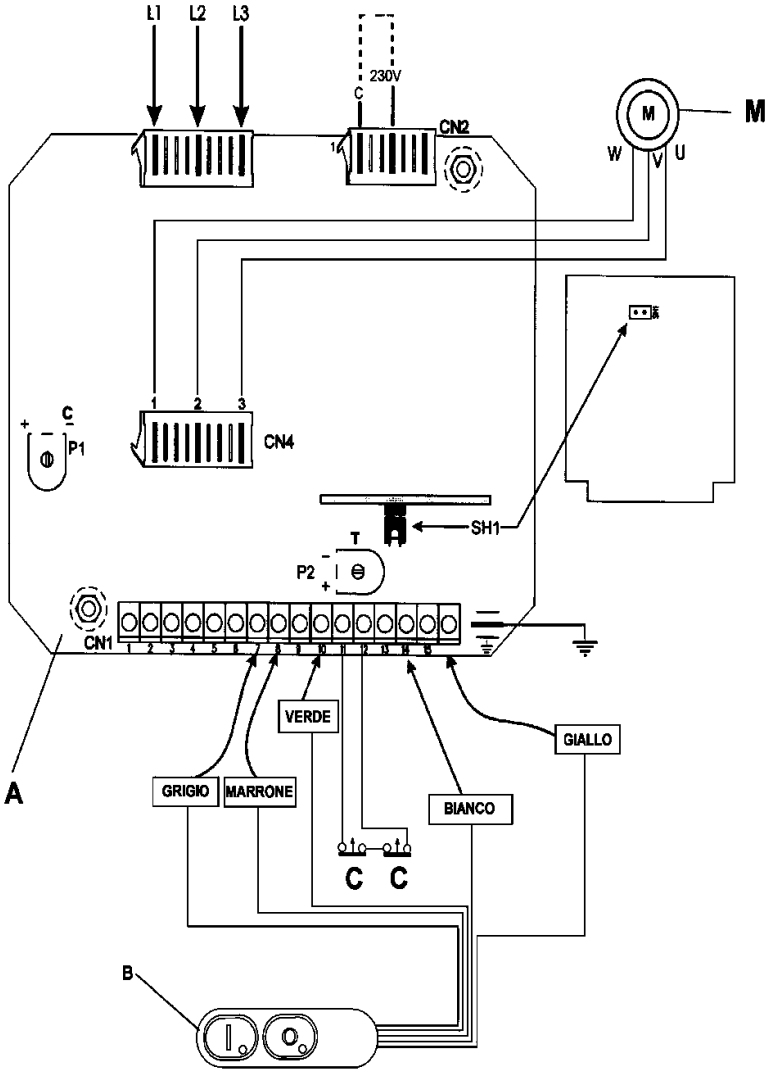

Fig. 2.6.3

Key

A = card of self-braking motor
B = star-stop button
C = safety microswitch
M = motor
L1, L2, L3 = three-phase line

3 Testing, transport, delivery and installation

3.1 *Testing*

Your machine has been tested at our factory to ensure correct operation and regulation. During testing, cutting tests are performed on material identical to the material cut by the user.

3.2 *Delivery and handling*

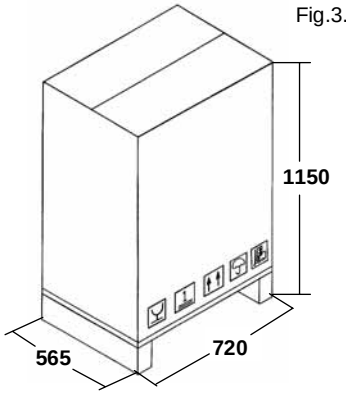

Fig.3.2.1 When packed, the machine weights **62 kg**.

NOTE
Measures are expressed in millimetres.

All the equipment delivered di thoroughly checked before delivery to the forwarding agent. Unless agreements have been reached otherwise with the customer or transport conditions are particularly critical, the machine will be wrapped in nylon and cardboard on pallet. The dimensions of the packing are shown in Fig. 3.2.1. Upon receipt of the machine, check that the packing is intact. If it has been damaged, sign the carrier's delivery note but add: "I accept, with reservation....." and the reason. If, once the package has been opened, some of the machine components are found to be damaged, report the fact to the forwarding agent within three days from the date specified in the documents.

3.2.1 List of provided equipment

The following equipment is included in the machine packing:
N° 1 use and maintenance manual

3.3 *Installation*

ATTENTION!
The installation area must be level and firm. The supporting surface must provide a completely safe base. Plenty of space must be left around the machine - see Fig. 2.4.1. This permit greater manoeuvrability in the work phases and provides access for subsequent maintenance operation. **S**uitable lighting must be provided around the machine to ensure correct operator visibility.
Move the packing with a forklift truck or similar as the machine is packed on a pallet and protected in a cardboard (Fig. 3.3.1).

- Remove the two bands that fix cardboard to pallet.
- Unscrew the saw form pallet.
- Remove cellophane machine wrapping and all other packing inside.
- Two people are at least necessary to move the machine and they have to catch it from working surface (Fig. 3.3.2) - it weights 55 Kg.

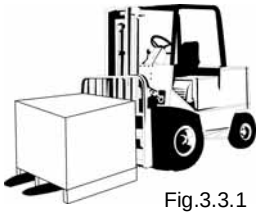
Fig.3.3.1

"ATTENTION!"
To move the machine are necessary two people.

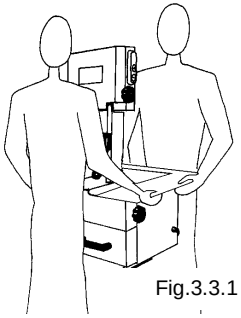
Fig.3.3.1

3.3.1 Disposal of the packing

The packing components - cardboard, nylon, wood - can be considered solid urban refuse and can therefore be disposed of normally. If the machine is delivered to countries with special regulations, the packing must be disposed of in accordance with the laws in force.

3.3.2 Handling the machine

Lift the machine with a forklift truck of suitable capacity. **C**heck the stability and positioning of the load on the forks, in particular on rough, slippery or sloping surfaces. When the machine is being moved, keep the load as low as possible in order to ensure greater stability and visibility. **W**iden the forks to obtain maximum stability.

3.4 *Connection to the electrical system*

- Connect a 16 Amp plug, provided by manufacturer, to the electrical supply cable. **C**heck that the electrical power supply line corresponds to the value on the machine identification plate. **A**ll work must be carried out by specialist personnel only, specifically authorised by the person in charge. **C**onnect up to a mains with efficient earth socket.

3.4.1 400 volt 50/60 Hz three-phase machine and 230 volt 50/60 Hz three-phase machine

In these versions, the saw is provided with a power supply cable with section of 4x1 and length of approximately 1.5 metres. Connect the cable to the three-phase power mains, fitting a 16 A magneto thermal differential switch in between.

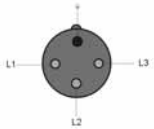

3.4.2 230 volt 50/60 Hz single-phase machine

In this version, the saw is provided with a power supply cable with section of 3x1.5 and length of approximately 1.5 metres. Connect the cable to the 220V-50/60 Hz single-phase power mains, fitting a 16 Ampere magneto thermal differential switch in between.
For versions with voltages different from the above, consult the manufacturer. If you need to lengthen the power supply cable, use a cable with the same section as the one fitted.
To check the correct electrical connection see 5.1.

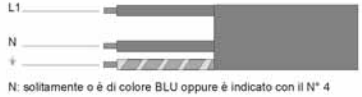

4 Control panel and indicators

4.1 *Comands and indicators list*

Fig.4.1.1

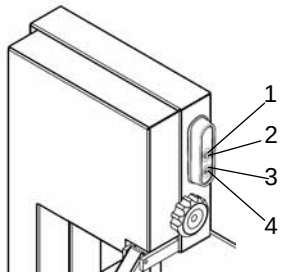

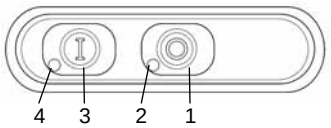

1 Stop button
Black colour.
Push to stop motor.

2 Light indicator connection to the mains
Green colour.
Indicates connection with network. Green button no. "1" is always lighted when the machine is connected to mains

3 Start button
Grey colour.
Push to start the cutting blade.

4 Start light indicator
Red colour.
Indicates that the blade is moving. It's near the start button. It is red and it's visible just when the machine is working.

5 Starting and stopping

5.1 *Checking the correct electrical connection*

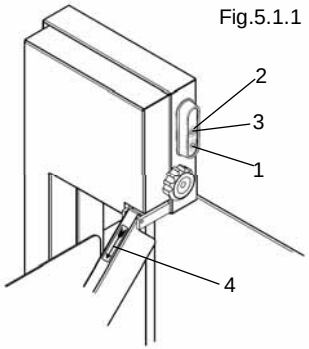

Fig.5.1.1

Set the differential switch fitted upstream to position "I".
The illuminated indicator "2" indicating that the machine is powered must be illuminated. Press the start button "1" and, immediately afterwards, the stop button "3", checking the blade rotation direction. The blade must rotate in the direction indicated by the arrow "4" fig. 5.1.1, i.e. towards the work top. If the rotation direction is incorrect, disconnect the differential switch, setting it to "0". In this way the electrical power supply is disconnected. Invert one current wire in the plug and repeat the procedure for checking the correct electrical connection (see 5.1)

Note: In the machines connected to a single-phase line and designed for single-phase power supply, the correct rotation direction is defined directly by the manufacturer.

5.2 *Checking the presence and efficiency of the guards and safety devices*

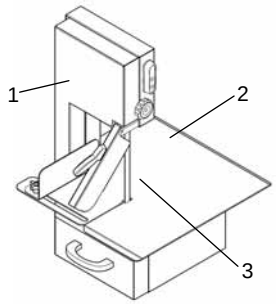

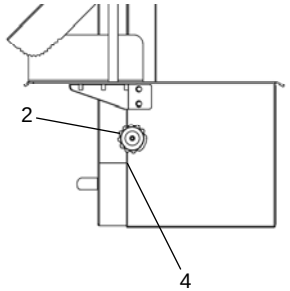

Fig.5.2.1

A - Checking the efficiency of the micro switch "4" (Fig. 5.2.1)
With the machine connected to the mains and blade working, open the snap lock "2" thus releasing the casing "1". Slightly open the casing until the micro switch "4" cuts in. This operation should stop the machine to prevent object or hands coming into contact with pulleys and moving blades. Reclose the casing "1" and lock it with the snap locks "2". The machine should not restart when the casing is closed - the start button must be pressed to enable restarting. In the case of faulty operation, switch the machine off and call the servicing department

B - Blade mobile guard in the work area (pusher) "3" (Fig. 5.2.1)
Check that the pusher "3", which prevents operator contact with the blade, is fitted, in perfect condition and correctly positioned.

5.3 *Starting the saw (Fig. 5.3.1)*

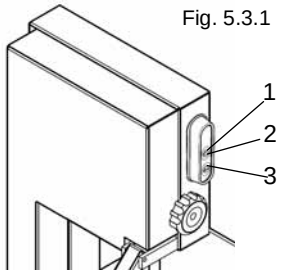

Fig. 5.3.1

Move the machine power supply differential switch from position "0" to position "I". The illuminated indicator "2", indicating that the machine is powered, must be illuminated. Press the start push-button "1", thus activating rotation of the blade.

5.4 *Stopping the saw (Fig. 5.3.1)*

To stop quickly, for example in emergencies, press the emergency stop button "1". The illuminated indicator "2" remains on and indicates that the electrical panel is still powered. Set the differential switch fitted upstream to "0", thus disconnecting the machine.

Note: Whenever a work shift is finished and the machine is left to rest, the differential switch must be set to "0".

6 Using the saw

6.1 *Important warnings*

ATTENTION!
Only authorized personnel may use the machine. Before beginning work, the operator must ensure that all the guards are in place and that the safety devices are fitted and in efficient working order. If not, switch the machine off and contact the head of maintenance. Perform several empty cutting operations with the assistance of specialist personnel in order to acquire the sensitivity necessary for working in complete safety.

6.2 *Preliminary settings (Fig. 6.2.1)*

The portioning device "1" must be regulated according to the size of the piece to be cut.

-To regulated the portioning device "1" loosen the knob "2" and set the portioning device to the required distance from the cutting width. Tighten the knob "2".

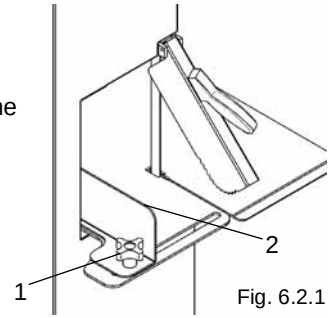

Fig. 6.2.1

6.3 - *Using the saw (Fig. 6.3.1)*

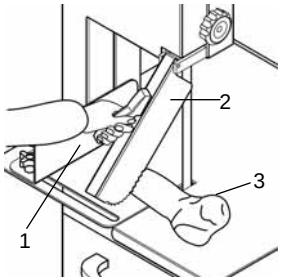

Fig.6.3.1

Having performed the settings described in par. 6.2, the machine is ready for use.

- Rest the piece to be cut “3” on the work top against the portioning device “1”.
- Start the machine.
- Move the piece up to the blade, remove your hands from the area and grip lever “2” of the pusher.

Note: The saw is designed to work intermittently, i.e. after a period of work there will be a pause. The work and pause times are given in the identification plate shown on page 6, letter “1”.

IT IS STRCITLY FORBIDDEN FOR SAFETY REASONS TO CUT FOOD PRODUCTS SMALLER THAN 50 mm
Never cut food products without utilising the pusher “2”

ATTENTION! Always use the pusher when working with the machine to avoid the risk of accidents.

6.4 Using the support (optional)

ATTENTION! The support must be positioned on a flat firm floor. Screw the machine into the support using the screws “1” provided (see Fig. 6.4.1).

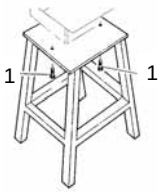

Fig.6.4.1

6.5 Use of the sliding table for cutting meat (optional)

On request the manufacturer can also supply an extra part called “Sliding table” (2) on the working table (3), ideal for cutting meat. By putting the piece of meat on the sliding table and pushing it toward the blade by the handle by the board (1): the adherence of the meat to the working table will reduce very significantly. This helps the meat cutting operations and ensures the safety of the operator. In case you don’t need to use it, you have only to tip-up it under the working table

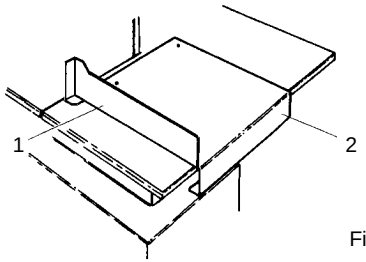

Fig.6.5.1

7 Maintenance

7.1 Important warnings

All maintenance and cleaning operations on the saw must be carried ut with the machine at a standstill and disconnected from the mains. **T**he area where the maintenance operations are carried out must always be kept clean and dry..
Do not allow non-authorised personnel to work on the machine**. D**o not touch the openings without adequate protections (gloves, goggles, etc...). Do not use petrol, solvents or other inflammable liquid as detergents; use the authorised non-toxic and non-flammable solvents on sale. **D**o not use compressed air to clean the machine. **I**f really necessary, use goggles with side protections and limit the pressure to a maximum of 2 atm. (1,9 bar). **D**o not use naked flames as a means of lighting when carrying out checking and maintenance operations. **D**o not lubricated the machine when operating.

7.2 *Foreword*

Good maintenance and correct use are fundamental to ensure good saw performance and safety. To guarantee regular and constant operation of the machine and to avoid lapse of the guarantee, only original spare parts must be used when replacing components.

7.3 *Checks carried out at our factory*

Your machine has undergone extensive testing by the manufacturer in order to ensure correct start-up and settings. In particular, the manufacturer has carried out the following checks:

Before starting up:

- Check on the machine operating voltage: it must correspond to the purchaser requirements.
- Check to ensure that all the warning and danger signs and rating plate with technical specifications and serial number are fitted.
- Check on tightening of all the bolts.
- Check on tensioning of the cutting blade.
- Check to ensure that the machine complies with the current regulations and the previous of this manual.

With the machine operating:

- Check on the efficiency of the guards and safety devices; opening door or rest tray of 5 mm at least the machine have to stop.
- Check on correct alignment of the blade drive pulleys.
- general operating check.
- Repeated cutting tests to check correct machine set-up according to the type of work required.
- Check that the blade stop within 4 sec, if not contact the maintenance.

7.4 *Check to be carried out at installation*

To ensure that the machine has not been damaged during transport or installation, the following checks should be carefully performed:

Before start-up:

- Check that the power supply voltage corresponds to the value given on the machine rating plate.
- Check that the warning and danger signs are fitted and in perfect condition.
- Check correct tensioning of the blade.

Check with the machine operating:

- Check the efficiency of the guards and safety devices. Transport could have damaged or altered the setting.
- Check that the cutting blade is correctly aligned.
- Perform some cutting tests with pieces the same size as those to be cut by the user.

7.5 *Periodical checks*

To ensure long-lasting reliability of your machine, in addition to the above, constant checks and controls must be performed as follows.

Before beginning each shift:

- check operation of the safety devices.
- Check the condition of the blade. If not sharpened or not in perfect condition, replace.
- Check that blade stop within 4 seconds
- Check tensioning of the blade.
- Check alignment of the blade respect to the pulleys.

ATTENTION!

If the blade don't stop within 4 sec. or for any other failures, contact the maintanance

After each shift:

- Thoroughly clean, eliminating all remains.
- Slide out, clean and refit the blade guide.

7.6 *How to perform the required checks*

7.6.1 Blade tensioning setting (Fig. 7.6.1)

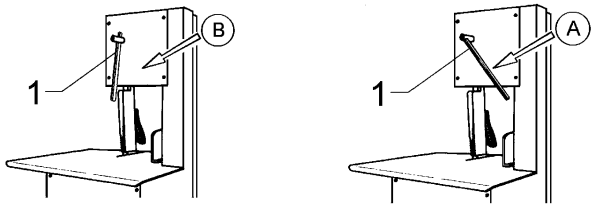

Fig. 7.6.1

Blade tensioning could be settled mechanically moving knob "1". Rotate the knob in position "A" (Fig. 7.6.1) blade is tensioning. To unblock the blade rotate the knob in the position "B".

ATTENTION! This operation is very delicated and dangerous, it must be done exclusively by qualified staff, expressly authorized.

7.6.2 Replacing the blade (Fig. 7.6.2)

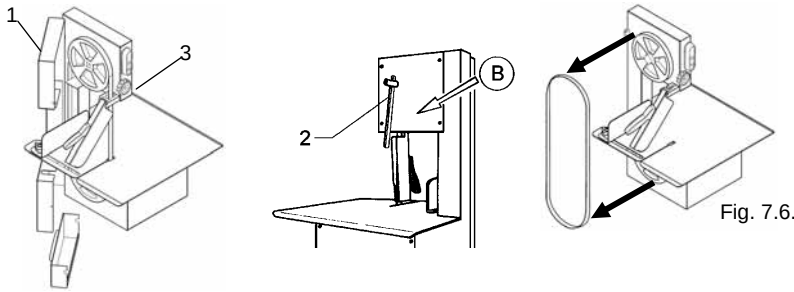

Fig. 7.6.2

- Set the differential switch fitted upstream to "0" and disconnect the mains plug.
- Open the casing "1" rotating knobs "3".
- Release knob "2" as indicated in fig. 7.6.2 arrow "B".
- Take the blade away from the pulleys.
- Before assembling the new blade, clean carefully the pulleys and the blade-guide. Every time the blade is replaced, we suggest to remove the higher pulley and to clean carefully the machine. When the pulley is removed, check the conditions of the tight-bearings. If they are noising, replace them.
- Assemble the new blade.
- Stretch the blade rotating the knob in position "A" (Fig. 7.6.2).
- Check the positioning of the blade on the pulleys: the blade must lean on the pulleys, except for the sharp part that must jut out of the pulley. See picture 7.6.3.
- Rotate by hands the pulleys and check the right positioning of the blade.
- Close casing "1" and lock it by knobs "3".

- Connect the electric plug to its outlet.
- Put the differential switch in “1” position.
- Start and stop the machine to verify that the blade remains in the right position as regards the pulley.

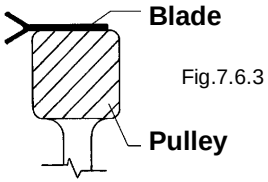

Fig.7.6.3

7.6.3 Types of blades

There are several blades on the market of different tooth pitches, blade thickness, height and steel quality.
We recommend for our bone saw tempered steel blades with a 20 cm height and 7 mm tooth pitch.
For different kinds of food products such as chicken or frozen meats, specific blades with different tooth pitches exist on the market offering perfect cutting without waste or altering the product.

Blade length	mm 1650
Blade width	mm 16
Material	AISI 420

7.6.4 - Handling the blade

HOW TO HANDLE A BLADE WITHOUT CUTTING YOURSELF

Proceed following each step in order.

1	Wear a pair of gloves adequate and suitable for handling sharp objects		
2	Remove the pack of blades from the box and position on top of a work surface. Make sure the teeth are facing downwards.	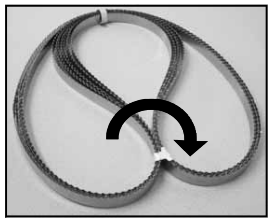	
3	Grip the blades with one hand, always wearing suitable and adequate gloves as illustrated in the photo…..	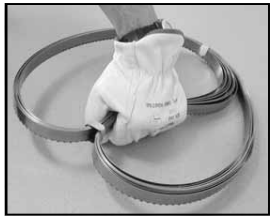	
4	.. With the other hand, always wearing suitable and adequate gloves, loosen and remove the tie fixture.		
5	Using both hands grip the blades and open the pack until the blades are stretched out.		

6	With one hand grip the blades ….		
7	With the other hand remove the second tie fixture…	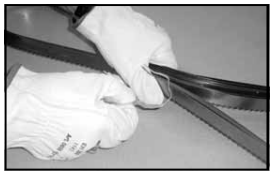	
8	With both hands grip the blades and carefully open the pack on top of the work surface.		
9	Now the blades are completely open grip one of the blades from the centre bend and slide it along the table as illustrated in the photo, now grip both ends and move it towards the centre. At this point lift the blade.		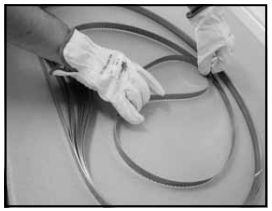
10	Once you have lifted the blade off the table using both hands stretch open. The blade is now ready to be mounted on the machine. .		The other spare blades must be tied and protected. To do this invert the procedure from point 8. It is recommended not to remove safety gloves before having completed all blade handling operations.

7.7 - Cleaning

7.7.1 - General guidelines

- The machine must be cleaned at least once a day and if necessary more frequently.
- Always accurately and thoroughly clean all the parts of the bone saw which come into direct or indirect contact with the food product.
- Never clean the machine with powered water cleaners or water jets, only use neutral detergents (pH 7). **It is strictly forbidden to use any other types of detergent.** Do not use cleaning utensils, brushes or any other the tool which could damage the surface of the machine

Before cleaning the machine unplug the plug from the power socket isolating the machine from the power supply;

***CAUTION:* When cleaning pay attention to cutting hazards created by sharp and pointed surfaces or parts.**

7.7.2 - When cleaning the machine

Fig. 7.7.1

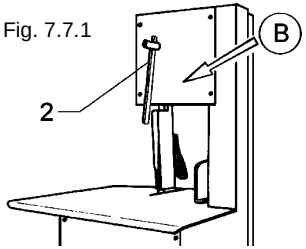

- Always wear suitable safety gloves for handling sharp objects
- Allentare il tensionamento della lama abbassando la leva “1”. Slacken tension in the blade by turning knob “1” anticlockwise completely and remove knob.

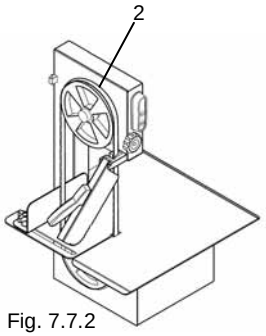

Fig. 7.7.2

- Grip blade “2” and remove from pulley as illustrated in fig. 7.7.2 and 7.7.3

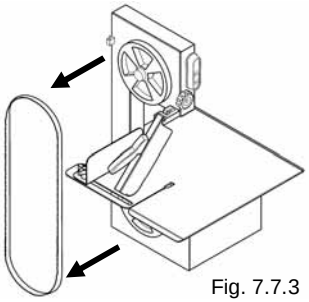

Fig. 7.7.3

- Slacken screw “3” by turning it anticlockwise, remove the washer which secures the pulley in position “4”, using both hands grip the pulley and pull towards yourself as illustrated in fig. 7.7.4 and clean with a sponge soaked in a neutral pH 7 detergent.

- Slacken screw fixture 5 by turning it anticlockwise, with both hands grip pulley “6” and pull it towards yourself as illustrated in fig. 7.7.4 and clean with a sponge soaked with a pH 7 neutral detergent.

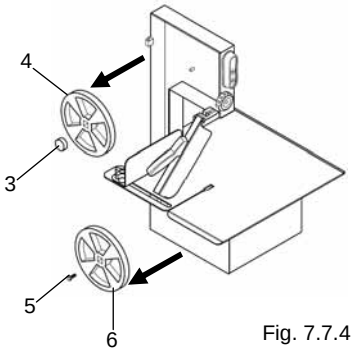

Fig. 7.7.4

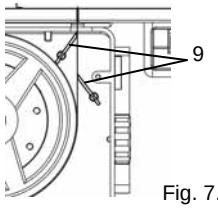

Fig. 7.7.5

- Remove all scrapers “9” and wash utilising a pH 7 neutral detergent.

- Having removed all the removal parts it is possible to clean the smooth surface of the machine utilising a pH 7 neutral detergent

- Rinse all components to eliminate any residual detergent and replace all parts removed.
  To replace proceed by inverting this procedure.

7.8. Cleaning of blade-guide bosses (Fig. 7.6.6)

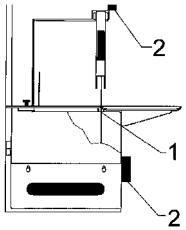

Fig.7.6.3

Once finished every work-shift, clean carefully plug “1” .
- Stop the machine, put the differential switch in “0” position and take the electric feeding plug away.
- Open casing and clean carefully the blade cleaning “1” removing every working-residue.
- Close the casing and block it with knob “2”.

7.7 *Out of order*

Materials as stainless steel have been employed to realise the machine. They don’t need special operations for scrapping.
- Once disconnected the differential switch and taken the electric feeding plug away, you can take the machine into pieces.
- Disassemble the electric engine and its electric and electronic components.
- Disassemble the blade made of carbon steel.
- Disassemble the pulleys made of aluminium.
- The structure of the machine is made of stainless steel, as bolts.

7.8 *Spare parts*

In case of necessity of spare parts, contact the manufacturer that will provide to send you the catalogue. Do not use original spare parts. Assemble must be carry out from specialised personnel only.

8 Troubles and remedies

8.1 *Troubles, causes and remedies*

Troubles
1- The machine don't start
2- The cut isn't linear
3- The blade falls from the pulleys of support.
4- The blade is superheated.

Causes
1- The differential switch is in "0" position.
1.1- The pulleys' casing isn't rightly closed.
1.2- The micro-switch on the pulleys' casing doesn't work.
1.3- Defective electric engine or defective electric card.

2- The blade isn't sharp.

3- Not right alignment of the higher pulley
3.1- The blade isn't rightly welded.
3.2- Not right temsioning of the blade.

4- Scraps of work blocked near tha mini-guides
4.1- Higher pulley's bearing locked.
4.2- The blade isn't sharp.

Rimedi
1- Put the switch in "1" position.
1.1- Close rightly the pulley's casing.
1.2- Call the technical assistance.
1.3- Call the technical assistance.

2- Replace the blade (par. 7.6.2).

3- The operation must be done by specialized and authorized staff.
3.1- Replace the blade even if it's new.
3.2- Call the teechnical assistance.

4- Remove every residue of work near the blade-guides (par. 7.6.4).
4.1- Replace the bearings.
4.2- Replace the blade. (par. 7.6.2).

9 Spare parts

9.1 *Spare parts*

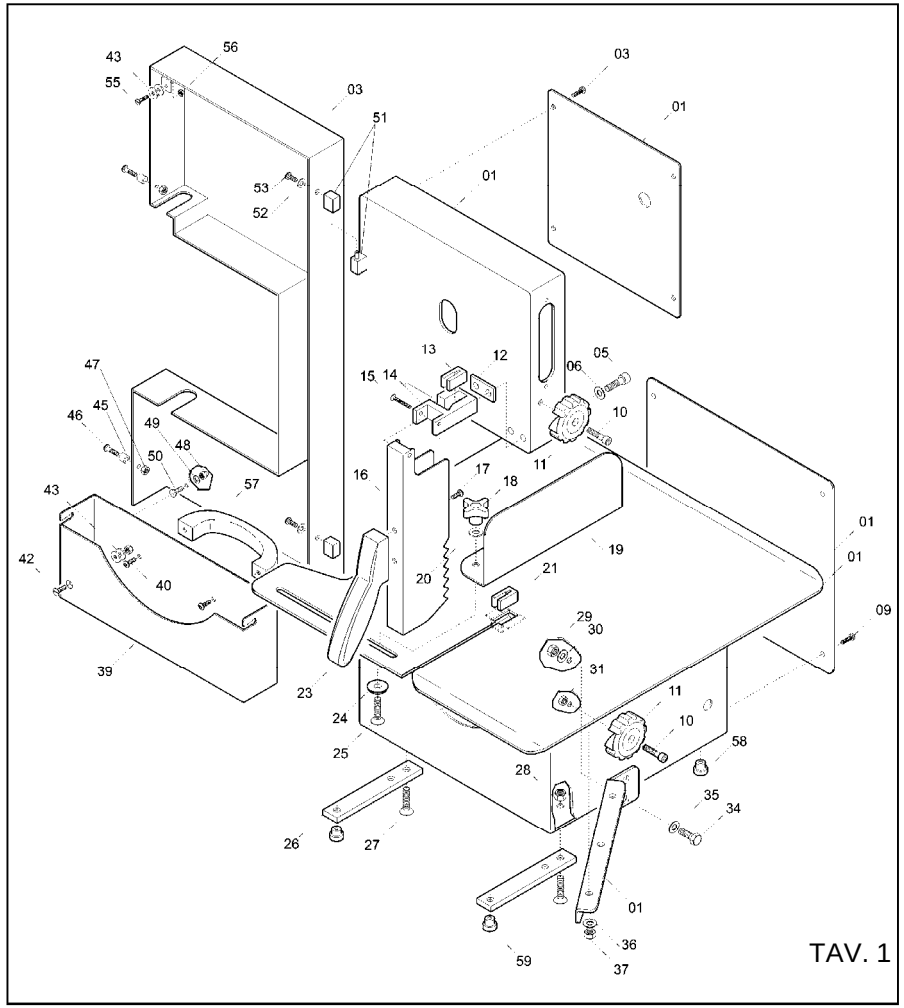

TAV. 1

RIF.	CODICE
01	010GR
03	01040
11	10704
12	01023
13	01008
14	01015
16	01002
18	37002
19	01001
21	200101
23	201006
24	200102
26	200101
39	200100
43	103330
51	20010 B
57	151001

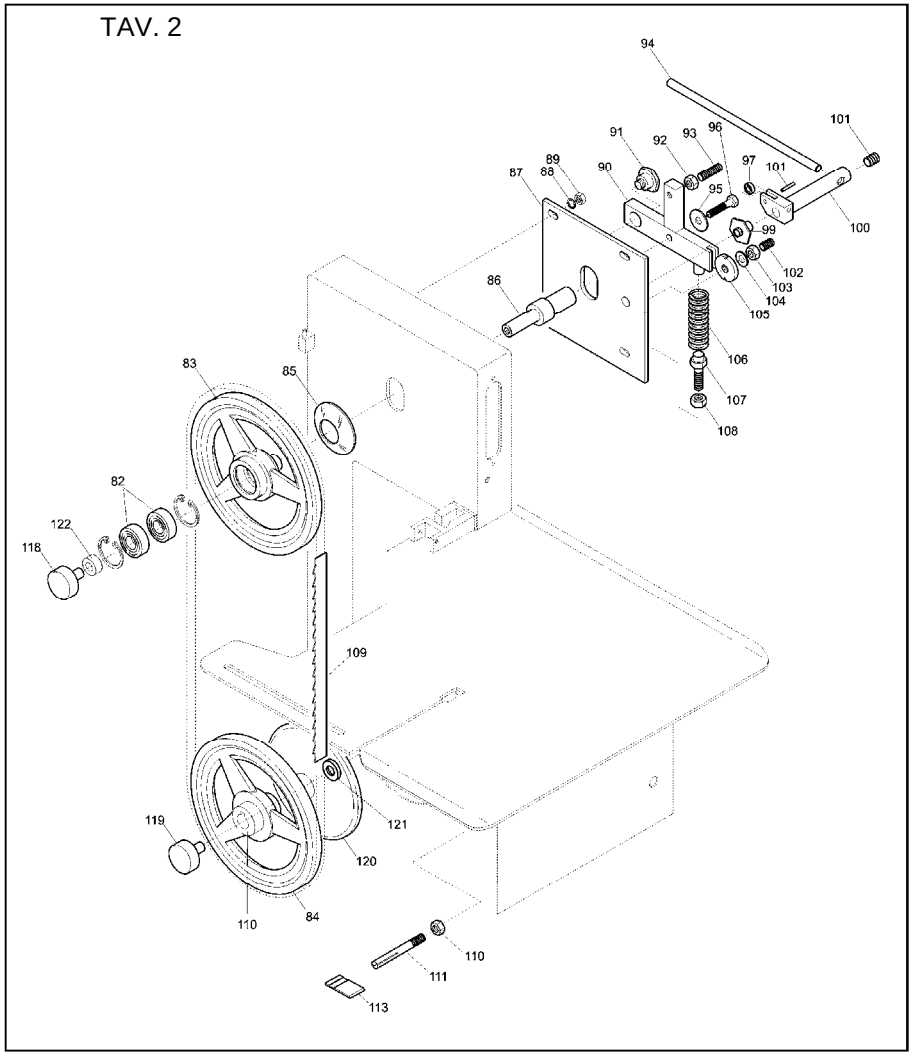

RIF.	CODICE
100	2001005
105	2010081
106	2010080
107	2001011
109	151650U16
111	2001030
113	2001032
118	2001022
119	2001026
120	2010517
121	1242002
122	2001029
82	1150002
83	2001036
84	2001027
85	2010085
86	2001010
87	2001013
90	2001006
91	2010078
94	2001012
97	2001007
99	2001009

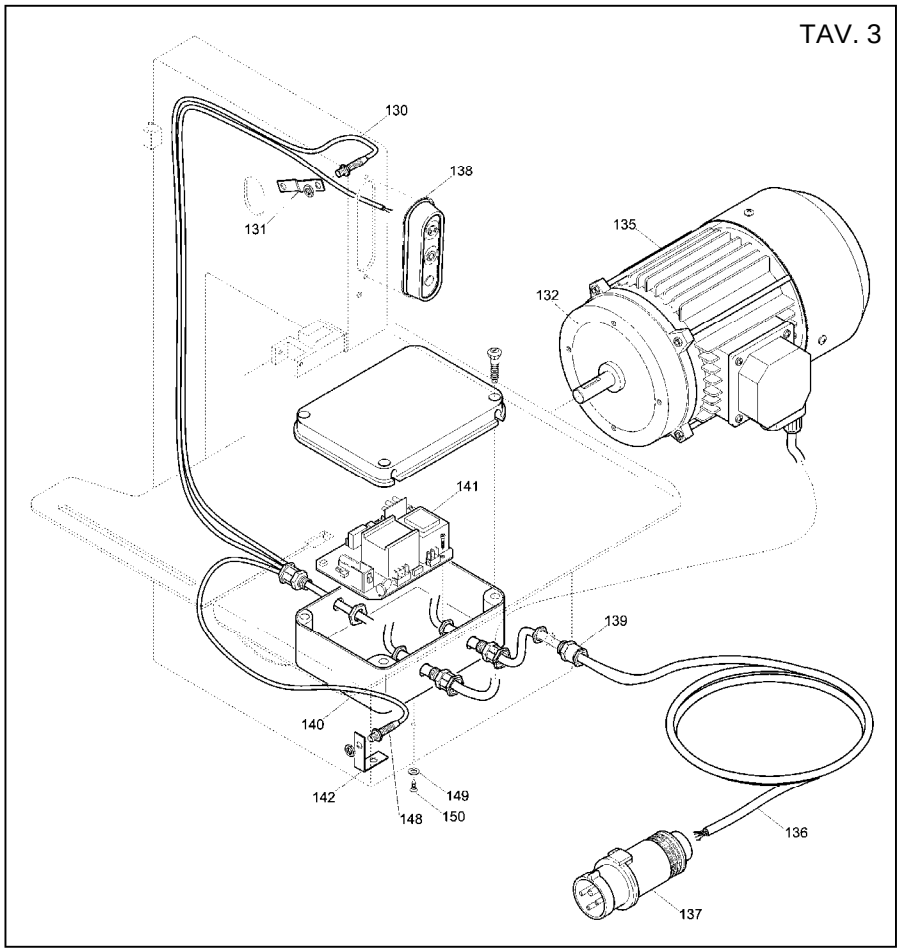

RIF.	CODICE
130	1033302
142	2001019
132	2010516
135 A	1810501
135 B	1810502
137 A	1010014

RIF.	CODICE
137 B	1010015
138	1010028
140	1010704
141	1010025
131	2001020